AGENDA

REGULAR BOARD MEETING

PLACE: Little Chute Village Hall
DATE: Wednesday, June 1st, 2022
TIME: 6:00 p.m.

Virtually attend the June 1st, Regular Board meeting at 6 PM by following the zoom link here:
Join Zoom Meeting
https://us06web.zoom.us/j/89427627216
Meeting ID: 894 2762 7216
Dial by your location: 312 626 6799 US (Chicago)

REGULAR ORDER OF BUSINESS

A. Invocation
B. Pledge of Allegiance to the Flag
C. Roll call of Trustees
D. Roll call of Officers and Department Heads
E. Public Appearance for Items Not on the Agenda

F. Consent Agenda
Items on the Consent Agenda are routine in nature and require one motion to approve all items listed. Prior to voting on the Consent Agenda, items may be removed at the request of any Board Member or member of the public. Any removed items will be considered immediately following the motion to approve the other items.
1. Minutes of the Regular Board Meeting of May 18, 2022
2. Disbursement List

G. Department and Officers Progress Reports

H. Discussion/Action—Space Needs Study - GIS Mapping

I. Discussion/Action—Intergovernmental Agreement (IGA) with Town of Vandenbroek for Buchanan Rd.

J. Discussion—Pheasant Run Storm Project Update

K. Discussion/Action—Budget Adjustment for LCCAN Fiber Optic Joint Project

L. Discussion—Draft Capital Improvement Plan (CIP) Initial Presentation

M. Call for Unfinished Business

N. Items for Future Agenda

O. Closed Sessions:

a) 19.85(1)(e) Wis. Stats. Deliberations or negotiations on the purchase of public properties, investing of public funds or conducting other specific public business when competitive or bargaining reasons require a closed session. *Discuss four (4) Economic Development items.*

b) 19.85(1)(c) Consideration of Employment, Promotion, or Performance Evaluation Data of any Public Employee of the Village of Little Chute. *Personnel, 2022 Review of Village Administrator*

P. Return to Open Session

Q. Adjournment

Requests from persons with disabilities who need assistance to participate in this meeting or hearing should be made with as much advance notice as possible to the Clerk's Office at 108 West Main Street, (920) 423-3852, email: Laurie@littlechutewi.org Prepared: May 27, 2022

MINUTES OF THE REGULAR BOARD MEETING OF MAY 18, 2022

Call to Order: President Vanden Berg called the Regular Board Meeting to Order at 6:00 p.m.

Pledge Allegiance to the Flag
President Vanden Berg led members in the reciting of the Pledge of Allegiance.

Roll call of Trustees

PRESENT: Michael Vanden Berg, President
Larry Van Lankvelt, Trustee
Brian Van Lankveldt, Trustee
John Elrick, Trustee
James Hietpas, Trustee

EXCUSED: Bill Peerenboom, Trustee
Don Van Deurzen, Trustee

Roll call of Officers and Department Heads

PRESENT: Beau Bernhoft, Administrator
Kent Taylor, Director of Public Works
Lisa Remiker-DeWall, Finance Director
John McDonald, Dir. Of Parks, Rec and Forestry
Dave Kittel, Community Development Director
Laurie Decker, Village Clerk
Chris Murawski, Village Engineer
Captain Slotke, Fox Valley Metro Police

EXCUSED: Tyler Claringbole, Village Attorney
Katherine Freund, LC Library Director

Public Appearance for Items Not on the Agenda

Consent Agenda
Items on the Consent Agenda are routine in nature and require one motion to approve all items listed. Prior to voting on the Consent Agenda, items may be removed at the request of any Board Member or member of the public. Any removed items will be considered immediately following the motion to approve the other items.

1. Minutes of the Regular Board Meeting of May 4, 2022
2. Minutes of the Committee of the Whole Meeting of May 11, 2022
3. Disbursement List
4. Adopt Resolution No. 14, Series 2022 CSM for Hammen Ct
5. Adopt Resolution No. 15, Series 2022 CSM for Faith Technologies
6. Appointment—Dave Kittel to Tax Commission

Moved by Trustee B. Van Lankveldt seconded by Trustee Elrick to approve the Consent Agenda as presented.

Ayes 4, Nays 0 – Motion Carried

Presentation – KerberRose Annual Report
Ms. Krisztina Dommer went over the audit done by KerberRose per the attached report.

Discussion/Action – Fireworks Discussion
Director McDonald presented the plans for Fireworks to be hosted in Doyle Park on July 1st. Joe Harlow and the Phil Weigman (Diamond Club-Fiscal Agent) are asking fees to be waived for the Event. Director McDonald

added fees are generally waved for events put on by Little Chute Civic Groups who will be giving back to the community.

Moved by Trustee Elrick, seconded by Trustee B. Van Lankveldt to approve the Special Events permit for Fireworks and waive fees.

Ayes 4, Nays 0 – Motion Carried

Discussion/Action—Chris Hartwig Memorial Bench & Plaque

Moved by Trustee B. Van Lankveldt, seconded by Trustee Elrick to approve as presented.

Ayes 5, Nays 0– Motion Carried

Discussion/Action—Vehicle Lift at Municipal Services Building
Director Taylor presented the need for a new lift in the Municipal Services Building.

Moved by Trustee Elrick, seconded by Trustee L. Van Lankvelt to approve the Vehicle Lift Purchase as presented.

Roll Call Vote

Brian Van Lankveldt	Aye
Michael Vanden Berg	Aye
Larry Van Lankvelt	Aye
John Elrick	Aye
Jim Hietpas	Aye

Ayes 5, Nays 0 – Motion Carried

Action – Adopt Resolution No. 16, Series 2022 CSM for Gardenia Drive
Director Kittel presented the CSM to split a lot, the plan commission has reviewed and does recommend approval of the CSM.

Moved by Trustee B Van Lankveldt, seconded by Trustee L. Van Lankvelt to adopt Resolution No. 16, Series 2022

Ayes 5, Nays 0 – Motion Carried

Action – Approve 2022 Budget Adjustment Crosswinds Estate Carryover

Moved by Trustee Elrick, seconded by Trustee L. Van Lankvelt to

Roll Call Vote

Brian Van Lankveldt	Aye
Michael Vanden Berg	Aye
Larry Van Lankvelt	Aye
John Elrick	Aye
Jim Hietpas	Aye

Ayes 5, Nays 0 – Motion Carried

Discussion/Action – Pine Street
Director Murawski presented an updated project plan for Pine Street. 3 exhibits were put together based on the discussion from the Committee of the Whole on May 11. A discussion on the plans and options took place. Plans will be brought back to the board for additional discussion at a future meeting.

Discussion/Action – 2022 CIP Dump Truck Purchase

Moved by Trustee B. Van Lankveldt, seconded by Trustee L. Van Lankvelt to approve the purchase as presented.

Ayes 5, Nays 0– Motion Carried

Call for Unfinished Business

Items for Future Agenda
Pine Street Discussion

Closed Sessions:

19.85(1)(e) Wis. Stats. Deliberations or negotiations on the purchase of public properties, investing of public funds or conducting other specific public business when competitive or bargaining reasons require a closed session. *Discuss two (2) Economic Development items.*

Moved by Trustee Elrick, seconded by Trustee L. Van Lankvelt to enter closed session at 7:33pm

Ayes 5, Nays 0– Motion Carried

Return to Open Session

Moved by Trustee Elrick, seconded by Trustee B. Van Lankveldt to exit closed session at 8:08pm

Ayes 5, Nays 0– Motion Carried

Adjournment

Moved by Trustee Elrick, seconded by Trustee L. Van Lankvelt to Adjourn the Regular Board Meeting at 8:10 p.m.

Ayes 5, Nays 0 – Motion Carried

VILLAGE OF LITTLE CHUTE

By: _____
Michael R. Vanden Berg, Village President

Attest: _____
Laurie Decker, Village Clerk

Disbursement List - June 1, 2022

Payroll & Payroll Liabilities - May 26, 2022	**$226,170.07**
Prepaid Invoices - May 20, 2022	**$41,543.11**
Prepaid Invoices - May 27, 2022	**$55,960.19**

Utility Commission-

CURRENT ITEMS

Bills List - June 1, 2022	**$48,740.96**
Total Payroll, Prepaid & Invoices	**$372,414.33**

The above payments are recommended for approval:

Rejected:_____

_____

Approved June 1, 2022

_____
Michael R Vanden Berg, Village Presiden

_____
Laurie Decker, Clerk

H:\FINANCE\ACCOUNT PAYABLE\BILLS LIST

Invoice	Type	Description	Total Cost	Terms	1099	Period	GL Account
2022 PARK SHELTER REFUNDS (5331)							
CFEST DOYLE 7/1	Invoi	REFUND RENTAL FEE	90.00	Open	Non	05/22	101-34401
CFEST DOYLE 7/1	Invoi	SECURITY DEPOSIT REFUND	50.00	Open	Non	05/22	101-21235
Total 2022 PARK SHELTER REFUNDS (5331):			140.00				
2022 REFUNDS - MISCELLANEOUS (5318)							
051422	Invoi	REFUND FOR LOST/DAMAGED BOOK	38.00	Open	Non	05/22	206-55110-238
051822	Invoi	OVERPAYMENT ON PERMIT #22-52	5.00	Open	Non	05/22	101-32270
Total 2022 REFUNDS - MISCELLANEOUS (5318):			43.00				
ADVANTAGE POLICE SUPPLY INC (2187)							
22-0044	Invoi	LTL ROUNDS	302.50	Open	Non	05/22	207-52120-223
Total ADVANTAGE POLICE SUPPLY INC (2187):			302.50				
AMERICAN FIDELITY ASSURANCE (4885)							
6051944	Invoi	FLEX SPENDING MAY	1,665.73	Open	Non	05/22	101-21368
Total AMERICAN FIDELITY ASSURANCE (4885):			1,665.73				
AMPLITEL TECHNOLOGIES (4637)							
19541	Invoi	MONTHLY BACK-UP, MANAGED SERVICES, OFFIC	3,765.00	Open	Non	05/22	207-52120-204
19541	Invoi	MULTI-FACTOR AUTHENTICATION FROM DUE-MA	108.50	Open	Non	05/22	207-52120-204
19541	Invoi	MONTHLY ANTIVIRUS, DROPSUITE-MAY	324.50	Open	Non	05/22	207-52120-240
Total AMPLITEL TECHNOLOGIES (4637):			4,198.00				
DEFENSIVE EDGE TRAINING & CONSULTING (4872)							
3494	Invoi	ARMORER COURSE FEE-COONEN & GOSTISHA	1,200.00	Open	Non	05/22	207-52120-201
Total DEFENSIVE EDGE TRAINING & CONSULTING (4872):			1,200.00				
EVERYTHING DEFIBRILLATORS LLC (5153)							
30	Invoi	AED PADS	659.75	Open	Non	05/22	207-52120-213
Total EVERYTHING DEFIBRILLATORS LLC (5153):			659.75				
FOX VALLEY HUMANE ASSOCIATION (971)							
5313	Invoi	MAR HANDLE FEES	80.00	Open	Non	05/22	207-52120-204
Total FOX VALLEY HUMANE ASSOCIATION (971):			80.00				
KERRY'S VROOM SERVICE INC (2013)							
9802	Invoi	REMOVE & INSTALL BRAKE PADS & ROTORS - U	430.28	Open	Non	05/22	207-52120-247
9806	Invoi	OIL & FILTER CHANGE - UNIT#113	45.15	Open	Non	05/22	207-52120-247
9807	Invoi	OIL & FILTER CHANGE & ANTIFREEZE- UNIT#89	52.15	Open	Non	05/22	207-52120-247
Total KERRY'S VROOM SERVICE INC (2013):			527.58				
KLINK HYDRAULICS LLC (5005)							
22477	Invoi	PARTS #6	5.77	Open	Non	05/22	101-53330-225
22478	Invoi	HOSE #29	56.20	Open	Non	05/22	101-53330-225
Total KLINK HYDRAULICS LLC (5005):			61.97				

Invoice	Type	Description	Total Cost	Terms	1099	Period	GL Account
KWIK TRIP INC (2365)							
APR 2022 286768	Invoi	APR FUEL FOR SQUADS	4,527.36	Open	Non	05/22	207-52120-247
Total KWIK TRIP INC (2365):			4,527.36				
LINDNER ACE HARDWARE LITTLE CHUTE (4702)							
274591-325001	Invoi	PROPANE	31.92	Open	Non	05/22	101-53330-218
274622-325001	Invoi	PLUMBING PARTS FOR POOL	10.56	Open	Non	05/22	204-55420-242
274625-325001	Invoi	SOCKET	3.99	Open	Non	05/22	101-53300-218
274627-325001	Invoi	GREASE	13.18	Open	Non	05/22	101-55200-218
274690-325001	Invoi	HARDWARE	1.98	Open	Non	05/22	101-55200-242
274726-325001	Invoi	HEX KEY SET	10.99	Open	Non	05/22	101-53300-218
274732-325001	Invoi	SURGE PROTECTOR OUTLET	22.99	Open	Non	05/22	101-51650-242
274789-325001	Invoi	THREADLOCKER BLUE	4.74	Open	Non	05/22	206-55110-242
274833-325001	Invoi	HARDWARE FOR LAWNROLLING	32.69	Open	Non	05/22	101-55200-218
274898-325001	Invoi	TAPE MEASURE	18.99	Open	Non	05/22	101-55200-218
274908-325001	Invoi	ITEMS TO FIX DOYLE CANAL WATER FOUNTAIN	31.07	Open	Non	05/22	101-55200-242
274914-325001	Invoi	MAXFIT BIT	3.99	Open	Non	05/22	101-53300-218
274955-325001	Invoi	HARDWARE FOR PARK BATHROOM	33.98	Open	Non	05/22	101-55200-242
274966-325001	Invoi	LETTERS FOR STREET SIGNS	4.17	Open	Non	05/22	101-53300-218
274975-325001	Invoi	BRACKETS FOR POOL OFFICE	16.58	Open	Non	05/22	204-55420-218
275035-325001	Invoi	RAKE	10.19	Open	Non	05/22	206-55110-242
Total LINDNER ACE HARDWARE LITTLE CHUTE (4702):			252.01				
MADISON NATIONAL LIFE (4857)							
1498488	Invoi	JUNE LTD	1,080.27	Open	Non	05/22	101-21385
1498488	Invoi	JUNE LIFE & ADD	458.45	Open	Non	05/22	101-21391
Total MADISON NATIONAL LIFE (4857):			1,538.72				
MATTHEWS TIRE & SERVICE CENTER (768)							
282654	Invoi	FLAT REPAIR-SQUAD 99	35.76	Open	Non	05/22	207-52120-247
Total MATTHEWS TIRE & SERVICE CENTER (768):			35.76				
MCMAHON ASSOCIATES INC (276)							
400316	Invoi	BUILDING INSPECTIONS 04/03/22 - 04/30/22	524.80	Open	Non	05/22	101-52050-204
926453	Invoi	TRAIL BRIDGES-NORTHSIDE	10,053.60	Open	Non	05/22	420-57620-280
Total MCMAHON ASSOCIATES INC (276):			10,578.40				
MENARDS - APPLETON EAST (319)							
17858	Invoi	CAST IRON SUMP PUMP	129.99	Open	Non	05/22	620-53634-255
Total MENARDS - APPLETON EAST (319):			129.99				
NEWS PUBLISHING CO INC (857)							
BE63138	Invoi	NOXIOUS WEEDS NOTICE	84.00	Open	Non	05/22	101-53460-227
BE64945	Invoi	OPEN BOOK	168.18	Open	Non	05/22	101-51650-207
Total NEWS PUBLISHING CO INC (857):			252.18				
O'REILLY AUTOMOTIVE INC (1036)							
2043-322382	Invoi	PAINT & SEALANT	50.91	Open	Non	05/22	101-52200-247

Invoice	Type	Description	Total Cost	Terms	1099	Period	GL Account
Total O'REILLY AUTOMOTIVE INC (1036):			50.91				
OSHKOSH OFFICE SYSTEMS (5133)							
AR75653	Invoi	INKJET CARTRIDGE	194.37	Open	Non	05/22	101-51650-206
Total OSHKOSH OFFICE SYSTEMS (5133):			194.37				
PORTER LEE CORPORATION (2015)							
26920	Invoi	ANNUAL SOFTWARE SUPPORT 06/22-05/23	1,175.00	Open	Non	05/22	207-52120-204
Total PORTER LEE CORPORATION (2015):			1,175.00				
PSYCHOLOGIE CLINIQUE SC (4440)							
050222	Invoi	PSYCHOLOGICAL EVALUATION	540.00	Open	Non	05/22	207-52120-225
Total PSYCHOLOGIE CLINIQUE SC (4440):			540.00				
SAM'S CLUB/SYNCHRONY BANK (1728)							
05/22 00204221446	Invoi	PICTURE FRAMES & POST ITS	39.64	Open	Non	05/22	101-55300-206
Total SAM'S CLUB/SYNCHRONY BANK (1728):			39.64				
SPELLMAN TRAILERS INC (5348)							
165296	Invoi	PLOW PARTS	56.22	Open	Non	05/22	101-53330-218
Total SPELLMAN TRAILERS INC (5348):			56.22				
STONERIDGE LITTLE CHUTE LLC (4903)							
1016291348	Invoi	FOOD	59.47	Open	Non	05/22	101-52200-211
1032671207	Invoi	FOOD	34.99	Open	Non	05/22	101-52200-211
21060421752	Invoi	FOOD	18.57	Open	Non	05/22	101-52200-211
22023291822	Invoi	FOOD	27.34	Open	Non	05/22	101-52200-211
22047481612	Invoi	FOOD	192.93	Open	Non	05/22	101-52200-211
23011341642	Invoi	FOOD AND BEVERAGES	200.50	Open	Non	05/22	101-52200-211
24031811541	Invoi	FOOD	72.50	Open	Non	05/22	101-52200-211
24042891532	Invoi	FOOD AND BEVERAGES	86.76	Open	Non	05/22	101-52200-211
Total STONERIDGE LITTLE CHUTE LLC (4903):			693.06				
STRATEGY BYTES LLC (3860)							
102607	Invoi	TRACS UPDATES	180.00	Open	Non	05/22	207-52120-204
Total STRATEGY BYTES LLC (3860):			180.00				
THEDACARE (1983)							
APR 2022 1210055	Invoi	APRIL BLOOD DRAWS	340.00	Open	Med	05/22	207-52120-204
Total THEDACARE (1983):			340.00				
TIME WARNER CABLE (89)							
04/22 23749	Invoi	APRIL/MAY SERVICE	219.99	Open	Non	05/22	207-52120-203
05/22 16087	Invoi	MAY/JUNE SERVICE	163.77	Open	Non	05/22	101-51650-203
05/22 20279	Invoi	MAY/JUNE SERVICE	232.32	Open	Non	05/22	620-53924-203
05/22 56638	Invoi	MAY/JUNE SERVICE	12.24	Open	Non	05/22	101-52200-208
05/22 97368	Invoi	MAY/JUNE SERVICE	550.00	Open	Non	05/22	101-51650-203

Invoice	Type	Description	Total Cost	Terms	1099	Period	GL Account
Total TIME WARNER CABLE (89):			1,178.32				
U.S. BANK (5015)							
05/22 59455565491	Invoi	WIRELESS HEADPHONES	120.77	Open	Non	05/22	101-51420-206
05/22 59455565491	Invoi	WCMA MEMBER RENEWAL - BERNHOFT	149.86	Open	Non	05/22	101-51400-201
05/22 59455565491	Invoi	ADOBE CREDIT	35.85-	Open	Non	05/22	101-51400-208
05/22 59455565491	Invoi	NOTARY-DECKER	20.00	Open	Non	05/22	101-51440-228
05/22 59455565491	Invoi	ADOBE	189.77	Open	Non	05/22	101-51440-208
05/22 59455565491	Invoi	MONTHLY ZOOM	14.99	Open	Non	05/22	101-51440-208
05/22 59455565491	Invoi	ITEMS FOR LIBRARY PROGRAMS	664.53	Open	Non	05/22	206-55110-205
05/22 59455565491	Invoi	GAMES	320.59	Open	Non	05/22	206-55110-213
05/22 59455565491	Invoi	PERIODICALS	60.00	Open	Non	05/22	206-55110-207
05/22 59455565491	Invoi	BOOKS	380.84	Open	Non	05/22	206-55110-206
05/22 59455565491	Invoi	LABELS/VINYL/BACKGROUND CHECK	300.04	Open	Non	05/22	206-55110-218
05/22 59455565491	Invoi	POSTAGE	54.12	Open	Non	05/22	206-55110-226
05/22 59455565491	Invoi	GIFT CARD/GIFT BAG & CARD	60.16	Open	Non	05/22	101-52200-219
05/22 59455565491	Invoi	IAFC MEMBERSHIP-NECHODOM	240.00	Open	Non	05/22	101-52200-208
05/22 59455565491	Invoi	USB 6FT CABLE	25.31	Open	Non	05/22	101-52200-218
05/22 59455565491	Invoi	SHIRTS FOR BE ACTIVE WI FITNESS CHALLENGE	23.10	Open	Non	05/22	101-55300-218
05/22 59455565491	Invoi	POOL DECK DRAIN COVERS	126.57	Open	Non	05/22	204-55420-242
05/22 59455565491	Invoi	POOL WRISTBANDS	162.00	Open	Non	05/22	204-55420-218
05/22 59455565491	Invoi	LAMINATOR FOR 2ND FLR OFFICE USE	115.35	Open	Non	05/22	101-55300-206
05/22 59455565491	Invoi	LAMINATOR FOR 2ND FLOOR OFFICE USE	115.35	Open	Non	05/22	101-53310-206
05/22 59455565491	Invoi	MERCHANDISE CREDIT	21.88-	Open	Non	05/22	101-55300-206
05/22 59455565491	Invoi	ITEMS FOR BASEBALL & BASKETBALL PROGRA	669.91	Open	Non	05/22	101-55300-218
05/22 59455565491	Invoi	REPLACEMENT SINK FAUCETS	1,130.00	Open	Non	05/22	101-55200-242
05/22 59455565491	Invoi	ADDITIONAL TANDEM KAYAK PURCHASED	454.49	Open	Non	05/22	101-55200-221
05/22 59455565491	Invoi	ITEMS FOR SUMMER PROGRAMS	73.66	Open	Non	05/22	101-55300-218
05/22 59455565491	Invoi	ITEMS FOR LIBRARY PROGRAMS	330.06	Open	Non	05/22	206-55110-205
05/22 59455565491	Invoi	MOVIES AND VIDEO GAMES	762.37	Open	Non	05/22	206-55110-210
05/22 59455565491	Invoi	LAPTOP SLEEVE	19.99	Open	Non	05/22	206-55110-209
05/22 59455565491	Invoi	PDF EDITOR	161.98	Open	Non	05/22	404-57190-208
05/22 59455565491	Invoi	WIRELESS HEADPHONES	139.99	Open	Non	05/22	101-51420-206
05/22 59455565491	Invoi	LEAGUE OF WI MUNICIPALITIES TRAINING-MACK	110.00	Open	Non	05/22	101-51420-201
05/22 59455565491	Invoi	POOL STAFF SWIMSUITS	1,027.50	Open	Non	05/22	204-55420-218
05/22 59455565491	Invoi	LIFEGUARD CERTIFICATION-4 PEOPLE	155.80	Open	Non	05/22	204-55420-218
05/22 59455565491	Invoi	GO TO MEETING	151.92	Open	Non	05/22	207-52120-208
05/22 59455565491	Invoi	GFOA RENEWAL FEES-REMIKER-DEWALL	255.00	Open	Non	05/22	101-51420-208
05/22 59455565491	Invoi	SAFETY GLASSES, EAR MUFFS, & EAR PLUGS	114.92	Open	Non	05/22	101-53310-213
05/22 59455565491	Invoi	SAFETY EAR MUFFS, & EAR PLUGS	10.42	Open	Non	05/22	101-53300-213
05/22 59455565491	Invoi	SAFETY EAR MUFFS, & EAR PLUGS	10.42	Open	Non	05/22	101-53330-213
05/22 59455565491	Invoi	SAFETY EAR MUFFS, & EAR PLUGS	10.42	Open	Non	05/22	101-53460-218
05/22 59455565491	Invoi	SAFETY EAR MUFFS, & EAR PLUGS	10.42	Open	Non	05/22	201-53620-218
05/22 59455565491	Invoi	SAFETY EAR MUFFS, & EAR PLUGS	10.42	Open	Non	05/22	101-53350-213
05/22 59455565491	Invoi	SAFETY EAR MUFFS, & EAR PLUGS	10.42	Open	Non	05/22	101-52200-213
05/22 59455565491	Invoi	SAFETY EAR MUFFS, & EAR PLUGS	10.41	Open	Non	05/22	101-55440-218
05/22 59455565491	Invoi	SAFETY EAR MUFFS, & EAR PLUGS	10.41	Open	Non	05/22	610-53612-213
05/22 59455565491	Invoi	SAFETY EAR MUFFS, & EAR PLUGS	10.41	Open	Non	05/22	620-53644-218
05/22 59455565491	Invoi	SAFETY EAR MUFFS, & EAR PLUGS	10.41	Open	Non	05/22	630-53441-218
05/22 59455565491	Invoi	SAFETY EAR MUFFS, & EAR PLUGS	10.41	Open	Non	05/22	630-53442-213
05/22 59455565491	Invoi	FLASH DRIVES SEWER CAMERA	33.98	Open	Non	05/22	610-53612-251
05/22 59455565491	Invoi	PARKING TICKET SUSPENSIONS	76.50	Open	Non	05/22	207-52120-204
05/22 59455565491	Invoi	COFFEE SUPPLIES & FINGERPRINT WIPES	33.74	Open	Non	05/22	207-52120-218
05/22 59455565491	Invoi	WEBCAMS FOR SQUAD ROOM	62.97	Open	Non	05/22	207-52120-221
05/22 59455565491	Invoi	FLASH DRIVES/SAFETY LIGHTS/COFFEE FILTERS	84.32	Open	Non	05/22	207-52120-218
05/22 59455565491	Invoi	K9 STORAGE TOTE	17.97	Open	Non	05/22	207-52120-236

Invoice	Type	Description	Total Cost	Terms	1099	Period	GL Account
05/22 59455565491	Invoi	FLASH DRIVES	63.25	Open	Non	05/22	207-52120-218
05/22 59455565491	Invoi	TRANSUNION	75.00	Open	Non	05/22	207-52120-204
05/22 59455565491	Invoi	FLUID FOR #29	9.99	Open	Non	05/22	101-53330-225
05/22 59455565491	Invoi	CARTS FOR PLOWS	285.78	Open	Non	05/22	101-53350-218
05/22 59455565491	Invoi	PAPER TOWELS	39.46	Open	Non	05/22	620-53644-218
Total U.S. BANK (5015):			9,540.74				
UNIFORM SHOPPE (434)							
320391	Invoi	UNIFORM SHIRT	127.90	Open	Non	05/22	207-52120-212
Total UNIFORM SHOPPE (434):			127.90				
UNITED RAYNOR (425)							
24187	Invoi	REPAIR YARD WASTE GATE	140.00	Open	Non	05/22	101-53310-204
24192	Invoi	REPAIR YARD WASTE GATE	146.00	Open	Non	05/22	101-53310-204
Total UNITED RAYNOR (425):			286.00				
VILLAGE OF LITTLE CHUTE (1404)							
PETTY-POOL 2022	Invoi	PETTY CASH-POOL STARTUP FUND 2022	250.00	Open	Non	05/22	204-10150
Total VILLAGE OF LITTLE CHUTE (1404):			250.00				
WARRANT PAYMENTS (4565)							
022025226	Invoi	WARRANT-BOSSHART	600.00	Open	Non	05/22	207-21495
Total WARRANT PAYMENTS (4565):			600.00				
WI DEPT OF JUSTICE (672)							
L4504T 04/22	Invoi	APRIL BACKGROUND CHECKS	98.00	Open	Non	05/22	207-52120-218
Total WI DEPT OF JUSTICE (672):			98.00				
Grand Totals:			41,543.11				

Report GL Period Summary

Vendor number hash:	218680
Vendor number hash - split:	523997
Total number of invoices:	66
Total number of transactions:	127

Terms Description	Invoice Amount	Net Invoice Amount
Open Terms	41,543.11	41,543.11
Grand Totals:	41,543.11	41,543.11

Invoice	Type	Description	Total Cost	Terms	1099	Period	GL Account
2022 UTILITY REFUNDS (5319)							
170332503	Invoi	OVERPAYMENT-UTILITY ACCT #1-703325-03	20.31	Open	Non	05/22	001-15000
Total 2022 UTILITY REFUNDS (5319):			20.31				
AMERICAN FIDELITY ASSURANCE (4885)							
052422	Invoi	FLEX SPENDING MAY	1,603.23	Open	Non	05/22	101-21368
Total AMERICAN FIDELITY ASSURANCE (4885):			1,603.23				
AT& T (409)							
92078873810963 0	Invoi	MAY/JUNE SERVICE	17.58	Open	Non	05/22	207-52120-203
92078873810963 0	Invoi	MAY/JUNE SERVICE	123.03	Open	Non	05/22	101-53310-203
92078873810963 0	Invoi	MAY/JUNE SERVICE	17.58	Open	Non	05/22	204-55420-203
92078873810963 0	Invoi	MAY/JUNE SERVICE	70.31	Open	Non	05/22	620-53924-203
92078873810963 0	Invoi	MAY/JUNE SERVICE	52.72	Open	Non	05/22	206-55110-206
Total AT& T (409):			281.22				
CONWAY SHIELD (3828)							
483076	Invoi	BLACKINTON - NECK CHAIN	16.00	Open	Non	05/22	101-52200-219
Total CONWAY SHIELD (3828):			16.00				
DELTA DENTAL OF WISCONSIN (33)							
1778842	Invoi	JUNE DENTAL	6,481.43	Open	Non	05/22	101-21345
1778842	Invoi	JUNE VISION	426.72	Open	Non	05/22	101-21366
Total DELTA DENTAL OF WISCONSIN (33):			6,908.15				
GABES TOP IT OR DROP IT TREE SERVICE LLC (5351)							
22-00244	Invoi	TREE REMOVALS	16,000.00	Open	Non	05/22	101-55440-204
Total GABES TOP IT OR DROP IT TREE SERVICE LLC (5351):			16,000.00				
KAUKAUNA UTILITIES (234)							
MAY 2022	Invoi	SAFETY CENTER	596.24	Open	Non	05/22	207-52120-249
MAY 2022	Invoi	SAFETY CENTER	397.50	Open	Non	05/22	101-52250-249
MAY 2022	Invoi	VILLAGE HALL PLAZA	16.24	Open	Non	05/22	101-51650-249
MAY 2022	Invoi	VILLAGE HALL	786.17	Open	Non	05/22	101-51650-249
MAY 2022	Invoi	CIVIC CENTER	900.33	Open	Non	05/22	206-55110-249
MAY 2022	Invoi	MUNICIPAL POOL	50.70	Open	Non	05/22	204-55420-249
MAY 2022	Invoi	BALLFIELD DPI/SHED LIGHTS	167.55	Open	Non	05/22	101-55200-249
MAY 2022	Invoi	DOYLE PARK STAGE	55.78	Open	Non	05/22	101-55200-249
MAY 2022	Invoi	DOYLE PARK BALLFIELD DP2 LIGHT	61.45	Open	Non	05/22	101-55200-249
MAY 2022	Invoi	HEESAKKER PARK TRAIL	26.08	Open	Non	05/22	101-55200-249
MAY 2022	Invoi	HERITAGE PARK	21.61	Open	Non	05/22	101-55200-249
MAY 2022	Invoi	LEGION PARK RESTROOMS	201.70	Open	Non	05/22	101-55200-249
MAY 2022	Invoi	VAN LIESHOUT PARK	95.89	Open	Non	05/22	101-55200-249
MAY 2022	Invoi	VAN LIESHOUT BALLFIELD	223.61	Open	Non	05/22	101-55200-249
MAY 2022	Invoi	VAN LIESHOUT PARK SECURITY LT	56.05	Open	Non	05/22	101-55200-249
MAY 2022	Invoi	LINCOLN AVE E HEESAKKER PARK	72.33	Open	Non	05/22	101-55200-249
MAY 2022	Invoi	PUMP STATION JEFFERSON ST	832.04	Open	Non	05/22	620-53624-249
MAY 2022	Invoi	#4 WELL EVERGREEN DR	4,180.62	Open	Non	05/22	620-53624-249
MAY 2022	Invoi	#3 WELL WASHINGTON ST	1,787.92	Open	Non	05/22	620-53624-249
MAY 2022	Invoi	STEPHEN ST TOWER/LIGHTING	143.03	Open	Non	05/22	620-53624-249
MAY 2022	Invoi	CANAL BRIDGE - NORTH SIDE	18.00	Open	Non	05/22	101-53300-249

Invoice	Type	Description	Total Cost	Terms	1099	Period	GL Account
MAY 2022	Invoi	CANAL BRIDGE - SOUTH SIDE	32.87	Open	Non	05/22	101-53300-249
MAY 2022	Invoi	SECURITY LIGHT	12.34	Open	Non	05/22	101-53300-249
MAY 2022	Invoi	SIGNALS/GRAND & MAIN	40.00	Open	Non	05/22	101-53300-249
MAY 2022	Invoi	COMMUNITY BRIDGE LIGHTING	169.27	Open	Non	05/22	101-53300-249
MAY 2022	Invoi	SIGNALS/MAIN & MADISON	38.98	Open	Non	05/22	101-53300-249
MAY 2022	Invoi	STREET LIGHTING	8,419.82	Open	Non	05/22	101-53300-249
MAY 2022	Invoi	SIGNALS/NORTH & BUCHANAN	31.36	Open	Non	05/22	101-53300-249
MAY 2022	Invoi	PATRIOT DR FLAG POLE	29.32	Open	Non	05/22	101-53300-249
MAY 2022	Invoi	SIGNALS/NE CORNER N & ELM	68.86	Open	Non	05/22	101-53300-249
MAY 2022	Invoi	STEPHEN ST SIGN	16.24	Open	Non	05/22	101-53300-249
MAY 2022	Invoi	1401 E ELM DR	801.39	Open	Non	05/22	101-53310-249
MAY 2022	Invoi	721 W ELM	123.62	Open	Non	05/22	208-52900-249
MAY 2022	Invoi	723 DEPOT ST	17.31	Open	Non	05/22	418-51225-249
MAY 2022	Invoi	DOYLE PARK WELL	2,769.75	Open	Non	05/22	620-53624-249
MAY 2022	Invoi	1800 STEPHEN ST STORM	481.20	Open	Non	05/22	630-53441-249
Total KAUKAUNA UTILITIES (234):			23,743.17				
LAPPEN SECURITY PRODUCTS INC (735)							
LSPQ47088	Invoi	LABOR TO INSTALL APP AT POOL	405.00	Open	Non	05/22	204-55420-242
Total LAPPEN SECURITY PRODUCTS INC (735):			405.00				
MAGAZINE SUBSCRIPTIONS (5282)							
052422	Invoi	MAGAZINE SUBSCRIPTION	12.00	Open	Non	05/22	206-55110-207
6166592698-22	Invoi	MAGAZINE SUBSCRIPTION	30.00	Open	Non	05/22	206-55110-207
Total MAGAZINE SUBSCRIPTIONS (5282):			42.00				
OTIS ELEVATOR (293)							
CVA17352001	Invoi	WORKED PERFORMED ON ELEVATOR	455.94	Open	Non	05/22	101-51650-245
CVA17354001	Invoi	WORKED PERFORMED ON ELEVATOR	449.50	Open	Non	05/22	101-51650-245
CVA17361001	Invoi	WORKED PERFORMED ON ELEVATOR	1,347.50	Open	Non	05/22	101-51650-245
Total OTIS ELEVATOR (293):			2,252.94				
PREFORM CONCRETE LLC (5347)							
44481	Invoi	CATCH BASIN AND RISERS	793.02	Open	Non	05/22	630-53442-251
Total PREFORM CONCRETE LLC (5347):			793.02				
SPEEDY CLEAN DRAIN & SEWER (122)							
76065	Invoi	TELEVISE MAIN LINE	225.00	Open	Non	05/22	101-51650-242
Total SPEEDY CLEAN DRAIN & SEWER (122):			225.00				
TIMES-VILLAGER (3999)							
050122-LIBRARY	Invoi	1 YEAR RENEWAL	41.00	Open	Non	05/22	206-55110-207
Total TIMES-VILLAGER (3999):			41.00				
T-MOBILE (5286)							
975459487 05/22	Invoi	INTERNET HOT SPOTS	117.60	Open	Non	05/22	206-55110-209
Total T-MOBILE (5286):			117.60				

Invoice	Type	Description	Total Cost	Terms	1099	Period	GL Account
VILLAGE OF LITTLE CHUTE (1404)							
MAY 2022	Invoi	3609 FREEDOM RD	18.15	Open	Non	05/22	630-53441-249
MAY 2022	Invoi	721 W ELM DR	23.20	Open	Non	05/22	208-52900-249
MAY 2022	Invoi	1401 E ELM DR	848.20	Open	Non	05/22	101-53310-249
MAY 2022	Invoi	723 DEPOT ST	8.25	Open	Non	05/22	418-51225-249
MAY 2022	Invoi	1200 STEPHEN ST	13.20	Open	Non	05/22	620-53624-249
MAY 2022	Invoi	625 E EVERGREEN DR	104.78	Open	Non	05/22	620-53624-249
MAY 2022	Invoi	715 DEPOT ST	42.08	Open	Non	05/22	418-57800-204
MAY 2022	Invoi	#3 WELL WASHINGTON ST	12.38	Open	Non	05/22	620-53624-249
MAY 2022	Invoi	DOYLE PARK WELL #1	23.20	Open	Non	05/22	620-53624-249
MAY 2022	Invoi	PUMP STATION JEFFERSON ST	36.82	Open	Non	05/22	620-53624-249
MAY 2022	Invoi	DOYLE PARK POOL	11.09	Open	Non	05/22	204-55420-249
MAY 2022	Invoi	DOYLE PARK POOL/RESTROOMS	184.64	Open	Non	05/22	101-55200-249
MAY 2022	Invoi	DOYLE PARK POOL/RESTROOMS	184.65	Open	Non	05/22	204-55420-249
MAY 2022	Invoi	DOYLE SHELTER	7.68	Open	Non	05/22	101-55200-249
MAY 2022	Invoi	HEESAKKER PARK RESTROOM	94.45	Open	Non	05/22	101-55200-249
MAY 2022	Invoi	1509 E LINCOLN	34.48	Open	Non	05/22	101-55200-249
MAY 2022	Invoi	VANLIESHOUT PARK CONCESSION	7.68	Open	Non	05/22	101-55200-249
MAY 2022	Invoi	VANLIESHOUT PARK	474.37	Open	Non	05/22	101-55200-249
MAY 2022	Invoi	LEGION PARK RESTROOMS	423.15	Open	Non	05/22	101-55200-249
MAY 2022	Invoi	LEGION PARK SPRINKLER	24.13	Open	Non	05/22	101-55200-249
MAY 2022	Invoi	HERITAGE PARK	2.48	Open	Non	05/22	101-55200-249
MAY 2022	Invoi	DOYLE PARK DPI RESTROOMS	50.29	Open	Non	05/22	101-55200-249
MAY 2022	Invoi	CIVIC CENTER	382.04	Open	Non	05/22	206-55110-249
MAY 2022	Invoi	VILLAGE HALL	156.59	Open	Non	05/22	101-51650-249
MAY 2022	Invoi	SAFETY CENTER	68.71	Open	Non	05/22	101-52250-249
MAY 2022	Invoi	SAFETY CENTER	274.86	Open	Non	05/22	207-52120-249
Total VILLAGE OF LITTLE CHUTE (1404):			3,511.55				
Grand Totals:			55,960.19				

Report GL Period Summary

Vendor number hash:	48395
Vendor number hash - split:	93354
Total number of invoices:	18
Total number of transactions:	83

Terms Description	Invoice Amount	Net Invoice Amount
Open Terms	55,960.19	55,960.19
Grand Totals:	55,960.19	55,960.19

Report Criteria:
Invoice Detail.Voided = {=} FALSE

Invoice	Description	Total Cost	Period	GL Account
AMBROSIUS, WILLIE				
05/05/22 - 05/19/22	MEN'S SOFTBALL SUPERVISOR	30.00	05/22	101-55300-111
05/05/22 - 05/19/22	MEN'S SOFTBALL UMPIRE	164.00	05/22	101-55300-111
Total AMBROSIUS, WILLIE:		194.00		
AMERICAN FIDELITY ASSURANCE				
D463140	JUNE BILLING	1,856.70	06/22	101-21367
Total AMERICAN FIDELITY ASSURANCE:		1,856.70		
AMPLITEL TECHNOLOGIES				
19691	MOVE/PULL CABLING-PENNEY'S OFFICE	227.25	05/22	404-57190-204
Total AMPLITEL TECHNOLOGIES:		227.25		
AUTOMATED COMFORT CONTROLS				
31129	SERVICE REQUEST AT LIBRARY	107.50	05/22	206-55110-245
31140	SERVICE REQUEST AT VILLAGE HALL	387.50	05/22	101-51650-245
Total AUTOMATED COMFORT CONTROLS:		495.00		
BARTMAN, LAURA				
05/22/22	SECURITY DEPOSIT REFUND	100.00	05/22	208-21235
Total BARTMAN, LAURA:		100.00		
BELCO VEHICLE SOLUTIONS LLC				
7181	FRONT DOOR DECALS	25.00	05/22	207-52120-218
7187	SQUAD 121 CHANGEOVER	13,111.04	05/22	207-52120-303
Total BELCO VEHICLE SOLUTIONS LLC:		13,136.04		
BONS, SHARON				
051422	SECURITY DEPOSIT REFUND	100.00	05/22	208-21235
Total BONS, SHARON:		100.00		
BOUCHER, NORA				
052422-4	REFUND WORK PERMIT FEE	10.00	05/22	204-55420-218
Total BOUCHER, NORA:		10.00		
CARRICO AQUATIC RESOURCES INC				
20222585	WATER TESTING TABLETS	21.86	05/22	204-55420-225
Total CARRICO AQUATIC RESOURCES INC:		21.86		
CITY OF APPLETON				
9381	MAY 2022 TRANSIT	7,412.00	05/22	101-51780-233
Total CITY OF APPLETON:		7,412.00		

Invoice	Description	Total Cost	Period	GL Account
COTTINGHAM & BUTLER INS SERVICES INC				
260845	COMPENSATION STUDY-INSTALLMENT PAYMENT	3,200.00	05/22	101-51400-204
Total COTTINGHAM & BUTLER INS SERVICES INC:		3,200.00		
CROWE, SARAH				
CFEST 05/14/22	SECURITY DEPOSIT REFUND	50.00	05/22	101-21235
Total CROWE, SARAH:		50.00		
DISTRICT 2, INC.				
3537	FIRE HELMETS	2,834.15	05/22	101-52200-213
Total DISTRICT 2, INC.:		2,834.15		
DOLLEVOET, LIAM				
052422-1	REFUND WORK PERMIT FEE	10.00	05/22	204-55420-218
Total DOLLEVOET, LIAM:		10.00		
EAGLE GRAPHICS LLC				
229082	LIBRARY STAFF SHIRTS	135.20	05/22	206-55110-205
Total EAGLE GRAPHICS LLC:		135.20		
EITING, AMELIA				
052422-8	REFUND WORK PERMIT FEE	10.00	05/22	204-55420-218
Total EITING, AMELIA:		10.00		
FARRELL EQUIPMENT & SUPPLY CO INC				
1253043	ATTACHMENT FOR MIXER	39.99	05/22	101-53300-216
Total FARRELL EQUIPMENT & SUPPLY CO INC:		39.99		
FASTENAL COMPANY				
WIKIM274933	MISC PARTS FOR CONCRETE	67.64	05/22	101-53300-216
Total FASTENAL COMPANY:		67.64		
FERGUSON ENTERPRISES #1550				
6641428	GASKETS	188.57	05/22	620-53634-255
Total FERGUSON ENTERPRISES #1550:		188.57		
FERGUSON ENTERPRISES LLC #448 #1020				
6639158	COUPLINGS & GASKETS	171.18	05/22	620-53634-255
Total FERGUSON ENTERPRISES LLC #448 #1020:		171.18		
GRAINGER				
9313707755	FLANGE GASKETS	97.56	05/22	620-53634-255
9313707771	FLANGE GASKETS	130.08	05/22	620-53634-255
Total GRAINGER:		227.64		

Invoice	Description	Total Cost	Period	GL Account
GUERNSEY, HAILEY				
052422	REFUND WORK PERMIT FEE	10.00	05/22	204-55420-218
Total GUERNSEY, HAILEY:		10.00		
HAWKINS INC				
6177917	AZONE	723.68	05/22	620-53634-214
6177917	SODIUM SILICATE	2,807.40	05/22	620-53634-220
Total HAWKINS INC:		3,531.08		
ICON MARKETING INC				
1740-1	CUSTOM EMBROIDERED PATCHES	370.75	05/22	101-52200-212
Total ICON MARKETING INC:		370.75		
KARLS, EVELYN				
052422-6	REFUND WORK PERMIT FEE	10.00	05/22	204-55420-218
Total KARLS, EVELYN:		10.00		
KERRY'S VROOM SERVICE INC				
9811	REMOVE & INSTALL SERPENTINE BELT - UNIT#18	322.88	05/22	207-52120-247
9813	OIL & FILTER CHANGE - UNIT#182	45.15	05/22	207-52120-247
9817	OIL & FILTER CHANGE - UNIT#111	45.15	05/22	207-52120-247
Total KERRY'S VROOM SERVICE INC:		413.18		
KILLAM, OAKLEY				
052422-7	REFUND WORK PERMIT FEE	10.00	05/22	204-55420-218
Total KILLAM, OAKLEY:		10.00		
MACQUEEN EQUIPMENT				
P04077	CALIBRATION GAS	271.50	05/22	101-52200-247
Total MACQUEEN EQUIPMENT:		271.50		
MARCO TECHNOLOGIES LLC				
9985599	REPROGRAM PARK & REC NUMBER	120.00	05/22	404-57190-204
Total MARCO TECHNOLOGIES LLC:		120.00		
MATTHEWS TIRE				
283114	4 NEW TIRES ON SQUAD #191	752.48	05/22	207-52120-247
Total MATTHEWS TIRE:		752.48		
MCC INC				
297327	DENSE CRUSHER RUN	91.72	05/22	620-53644-216
297327	DENSE CRUSHER RUN	91.72	05/22	630-53442-216
Total MCC INC:		183.44		
MCDONALD, JOHN				
05/22 REIMBURSE	TUITION REIMBURSEMENT	634.00	05/22	101-55200-201
05/22 REIMBURSE	TUITION REIMBURSEMENT	634.00	05/22	101-55300-201

Invoice	Description	Total Cost	Period	GL Account
Total MCDONALD, JOHN:		1,268.00		
MCMAHON ASSOCIATES INC				
602358	VILLAGE HALL REVISIONS 2022	2,778.40	05/22	101-51650-306
Total MCMAHON ASSOCIATES INC:		2,778.40		
MCO				
28362	APRIL MILEAGE REIMBURSEMENT	473.20	05/22	620-53644-247
Total MCO:		473.20		
MENARDS - APPLETON EAST				
19375	CAULK FOR POOL	110.16	05/22	204-55420-242
Total MENARDS - APPLETON EAST:		110.16		
MILLER, SAMANTHA				
052422-2	REFUND WORK PERMIT FEE	10.00	05/22	204-55420-218
Total MILLER, SAMANTHA:		10.00		
MISTELE, PAM				
CFEST 081422	REFUND RENTAL FEE	90.00	05/22	101-34401
CFEST 081422	SECURITY DEPOSIT REFUND	50.00	05/22	101-21235
Total MISTELE, PAM:		140.00		
MORTON SAFETY				
217338	LATEX GLOVES	156.95	05/22	101-52200-213
Total MORTON SAFETY:		156.95		
NASSCO INC				
6159143	CAN LINERS	48.77	05/22	101-53300-218
6159143	CAN LINERS	48.76	05/22	101-55200-218
Total NASSCO INC:		97.53		
NORTHCENTRAL UTILITY OF WI LLC				
K191029	BACK LIGHTS #44	67.00	05/22	101-53330-225
Total NORTHCENTRAL UTILITY OF WI LLC:		67.00		
O'BRIEN, EMILY				
052422-3	REFUND WORK PERMIT FEE	10.00	05/22	204-55420-218
Total O'BRIEN, EMILY:		10.00		
POSTAL EXPRESS & MORE LLC				
231234	POSTAGE-WATER TESTS	19.17	05/22	620-53644-204
231307	POSTAGE-WATER TESTS	18.17	05/22	620-53644-204
231529	POSTAGE-WATER TESTS	18.17	05/22	620-53644-204
Total POSTAL EXPRESS & MORE LLC:		55.51		

Invoice	Description	Total Cost	Period	GL Account
PRIMADATA LLC				
JUNE 2022	JUNE POSTCARD POSTAGE	300.00	06/22	201-53620-226
JUNE 2022	JUNE POSTCARD POSTAGE	300.00	06/22	610-53613-226
JUNE 2022	JUNE POSTCARD POSTAGE	300.00	06/22	620-53904-226
JUNE 2022	JUNE POSTCARD POSTAGE	300.00	06/22	630-53443-226
Total PRIMADATA LLC:		1,200.00		
PUFFE, RICK				
05/05/22 - 05/19/22	MEN'S SOFTBALL UMPIRE	184.50	05/22	101-55300-111
Total PUFFE, RICK:		184.50		
READER, ROD & JOEY				
CFEST 05/21/22	SECURITY DEPOSIT REFUND	50.00	05/22	101-21235
Total READER, ROD & JOEY:		50.00		
REHMAN, MICHAEL				
05/05/22 - 05/19/22	MEN'S SOFTBALL UMPIRE	184.50	05/22	101-55300-111
Total REHMAN, MICHAEL:		184.50		
REINDERS INC				
2705362	NOZZLE FOR LEGION SPRINKLER	85.18	05/22	101-55200-242
Total REINDERS INC:		85.18		
SCHEPP, MATT				
HEESAKKER 05/14	SECURITY DEPOSIT REFUND	20.00	05/22	101-21235
Total SCHEPP, MATT:		20.00		
SHORT ELLIOTT HENDRICKSON INC				
425011	FIRE DEPT SPACE NEEDS ANALYSIS	1,869.90	05/22	101-52200-204
Total SHORT ELLIOTT HENDRICKSON INC:		1,869.90		
SLATER, EMILY M				
05/22 REIMBURSE	REIMBURSE FOR CSTARS TEAM POMS	1,670.00	05/22	101-55300-218
Total SLATER, EMILY M:		1,670.00		
SMITHSONIAN				
91080601347	MAGAZINE SUBSCRIPTION	11.00	05/22	206-55110-207
Total SMITHSONIAN:		11.00		
STAPLES ADVANTAGE				
3507894464	COPY PAPER	52.95	05/22	101-51650-206
3507894465	FRAME	4.99	05/22	101-55300-206
3507894465	COPY PAPER	38.92	05/22	101-51650-206
Total STAPLES ADVANTAGE:		96.86		
TANYA R CPR LLC				
376	HOME ALONE BABYSITTING CPR COURSE	1,140.00	05/22	208-52900-204

Invoice	Description	Total Cost	Period	GL Account
Total TANYA R CPR LLC:		1,140.00		
TREADWAY, JUDITH				
051522	SECURITY DEPOSIT REFUND	100.00	05/22	208-21235
Total TREADWAY, JUDITH:		100.00		
TRI CITY GLASS & DOOR				
I03-0512-97257	BACKER ROD FOR POOL FLOOR RECAULKING	80.80	05/22	204-55420-242
Total TRI CITY GLASS & DOOR:		80.80		
TSCHIMPERLE, PATRICK				
05/05/22 - 05/19/22	MEN'S SOFTBALL UMPIRE	143.50	05/22	101-55300-111
Total TSCHIMPERLE, PATRICK:		143.50		
UNIFIRST CORPORATION				
0970352944	SHIRTS/PANTS	6.08	05/22	101-53330-213
0970352944	LAUNDRY BAGS/WIPERS	10.20	05/22	101-53330-218
Total UNIFIRST CORPORATION:		16.28		
US AUTOFORCE				
4076776	TIRES FOR #98 & 46	342.54	05/22	101-53330-225
Total US AUTOFORCE:		342.54		
VAN STIPHOUT, JAY				
05/05/22 - 05/19/22	MEN'S SOFTBALL SUPERVISOR	15.00	05/22	101-55300-111
05/05/22 - 05/19/22	MEN'S SOFTBALL UMPIRE	184.50	05/22	101-55300-111
Total VAN STIPHOUT, JAY:		199.50		
VANDENHEUVEL, EVAN				
052422-5	REFUND WORK PERMIT FEE	10.00	05/22	204-55420-218
Total VANDENHEUVEL, EVAN:		10.00		
WEGAND, LAUREN				
052422-9	REFUND WORK PERMIT FEE	10.00	05/22	204-55420-218
Total WEGAND, LAUREN:		10.00		
Grand Totals:		48,740.96		

Report GL Period Summary

Vendor number hash:	254426
Vendor number hash - split:	298117
Total number of invoices:	69
Total number of transactions:	81

Terms Description	Invoice Amount	Net Invoice Amount
Open Terms	48,740.96	48,740.96
Grand Totals:	48,740.96	48,740.96

Report Criteria:
Invoice Detail.Voided = {=} FALSE

Item For Consideration

For Board Review On: June 1st, 2022 **Prepared On:** May 25th, 2022
Agenda Item Topic: Fire Space Needs Study – GIS Work **Prepared By:** Admin. Bernhoft

Report: SEH and our Fire team continue to work on the final draft of the Space Needs Study. We are nearing a point where we need to identify how much land will be required for an ideal layout of a new station. The Village is limited on available lots that would meet ideal identified criteria. A GIS study will take into consideration where calls for service have been requested in the last ten years along with future needs to further assist in identifying optimal parcels. SEH originally offered a GIS/Site Analysis option in their proposal for $5,500 which we did not opt into in March when the proposal was approved $12,466. The add on is proving to be necessary to finalize the study. The original budget was $25,000.

Fiscal Impact: No action is necessary since within original budget constraints.

Recommendation/Board Action: Staff recommends approving the additional GIS/Site Analysis add on for $5,500 to complete a comprehensive Fire Station Space Needs Study.

Respectfully Submitted,

Beau Bernhoft, Village Administrator

Cost

BASE COST

The SEH team proposes to complete the scope of work defined in the request for proposals for a lump sum **not to exceed fee of $12,466 inclusive of all expenses**.* ** It is ESTIMATED that reimbursable costs will be $500.

ALTERNATIVE COST

An alternate fee has been provided to complete the work identified as Additional Services designated with * in our proposal on page 12 (Scope of Services section). These services would be provided for a lump sum not to exceed fee of $11,200 and include GIS/site analysis ($5,500), exterior building elevations and 3D renderings ($3,200), and sustainable feature and cost to value exploration – ROI ($2,500).

**Our professional services fee is a lump sum not to exceed amount inclusive of expenses.*

***In the event that SEH is selected for the preliminary planning and estimating work and Little Chute moves the project forward into the design and construction phase, SEH will credit back a portion of the initial planning fee in the amount of $9,466 if we are engaged in the final design of the facility.*

TREVOR FRANK AIA, LEED AP®, NCARB, PMP
ARCHITECT IN: WI, AZ, GA, MN, IA, IN, ND, SD, IL, NE, OH, MI
PROJECT MANAGER

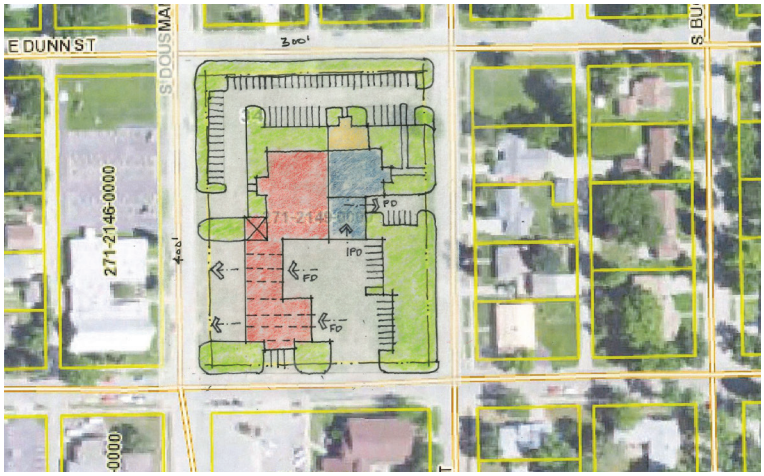

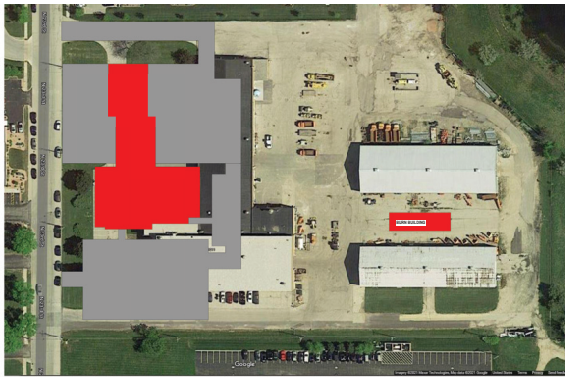

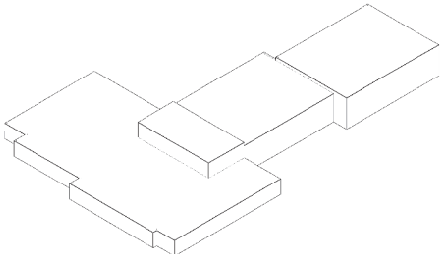

These images represent current site test fit and massing exercises for future fire stations in Prairie du Chien and Sheboygan. Both communities are contracted with SEH to solve their current and long term operations needs for their Fire and EMS services.

Item For Consideration

For Board Review On: June 1st, 2022 **Prepared On:** May 20th, 2022
Agenda Item Topic: Buchanan Road Street Improvement **Prepared By:** Admin. Bernhoft

Report: Following our meeting in April, our legal counsel reviewed the draft Intergovernmental Agreement (IGA) from the Town of Vandenbroek. Suggested changes to the Town have been made. The final copy of the IGA is included for the Board's review and approval. The County and the Town have begun work on their portion of the project due to some cost savings available to them for mobilization.

There are water valve box adjustments and sanitary manhole adjustments on the Village portion of Buchanan (Don DeGroot Drive to Evergreen Drive) that will need to be addressed. The cost is estimated at $7,068 by Hietpas Construction who can perform the work.

From our previous discussion in April, there was a recommendation from the Village Board to have our staff design a sidewalk in conjunction with the Buchanan Road repaving project for consideration. The cost of sidewalk installation is estimated to be $319,266. While the sidewalk is a benefit, the property owners do have access to Creekview Park from Hammen Court, where a trail connection will be installed. Staff recommends to not proceed with the sidewalk but consider for a future Capital Improvement Project since current access to the trail will be available.

Fiscal Impact:

<u>Construction Fund</u>

Buchanan Street Improvement (Expense)	+	$34,372
Net Position (Equity)	-	$34,372

Recommendation/Board Action: Staff recommends approving the Intergovernmental Agreement for the Buchanan Street improvements (including our costs outside of the agreement for associated utility costs) and the necessary 2022 Budget Amendment to fund the project.

Respectfully Submitted,
Beau Bernhoft, Village Administrator

INTERGOVERNMENTAL AGREEMENT
RELATING TO THE SHARING OF COSTS OF REPAVING BUCHANAN ROAD
Between the Town of Vandenbroek and Village of Little Chute

THIS AGREEMENT, is between the Town of Vandenbroek, a Wisconsin municipal corporation (hereinafter referred to as **"the Town"),** and the Village of Little Chute, a Wisconsin municipal corporation (hereinafter referred to as **"the Village"),** effective as of the date by which all parties have signed hereunder.

WITNESSETH:

WHEREAS, the Town and Village each own a portion of Buchanan Road between Don DeGroot Dr and Evergreen Dr, of which is to be repaved in 2022 (the Project)**;** and,

WHEREAS, the Town and Village find it to be cost effective to complete the Project jointly in order to obtain a lower price; and,

WHEREAS, the Project is to be funded by cost sharing by each of the Parties based on each party's respective portion of roadway; and,

WHEREAS, the parties have agreed to share the cost of the Project and wish to formalize their agreement pursuant to Section 66.0301 Wis. Stats.

NOW, THEREFORE, incorporating the recitals above and in consideration of the mutual covenants contained in this Agreement, and for other good and valuable consideration, the receipt and sufficiency of which are hereby mutually acknowledged, the parties hereby agree as follows:

1. Project. The Project shall consist of pulverizing, shaping and repaving of approximately 0 .98 miles of full width roadway with, approximately 0.755 miles of full roadway owned and operated by the Town, and approximately .0225 miles of full roadway owned and operated by the Village.

2. Lead Agency. The Town shall be the lead agency for the Project and shall bid, contract, oversee and pay the costs incurred in completing the project. The Village shall be kept aware of the construction plans and schedule and shall be consulted with regard to the placement of asphalt overlay and drainage of the existing bridge. The Village shall provide a plan for the proposed asphalt and transition zones. The Village shall be responsible for any additional costs incurred by the plan if any and the estimated Project Costs provided in the paragraph 3, Cost Sharing, shall be amended to reflect any additional cost.

3. Cost Sharing. Each party shall be responsible for the cost of the Project based on the portion of roadway within its jurisdiction. The parties agree the costs of the Project as estimated at this time, are proportionally divided as follows:

Town of Vandenbroek	$191,793.00

Village of Little Chute	$27,304.00

4. Invoice. The Town shall invoice the Village for its share of the Project costs upon receipt of invoice from the contractors performing the Project. The Village shall reimburse the Town within thirty (30) days after receipt of the invoice.

5. Costs for Village Default/Delay of Payment. The Village shall pay all invoices for the Project in a timely manner. If the Village is required to pursue legal remedies for default of any payment, the Village shall be responsible for and reimburse the Town for all costs, charges, and expenses (including reasonable attorney fees) incurred by the Town as a result of the Village failing to pay such invoices in a timely manner.

6. Liability. Each party shall be responsible for its own acts, errors, or omissions and for the acts, errors or omissions of its employees, officers, officials, agents, boards, committees, and commissions, and shall be responsible for any losses, claims, and liabilities that are attributable to such acts, errors, or omissions including providing its own defense, arising out of this Agreement. In situations involving joint liability, each party shall only be responsible for such losses, claims, and liabilities that are attributable to its own acts, errors, or omissions and the acts, errors or omissions of its employees, officers, officials, agents, boards, committees, and commissions. Neither party waives, limits or otherwise modifies the protections and limitations of liability found in Wis. Stat. 893.80 or any other protections available to the parties by law. This paragraph shall survive the termination or expiration of this agreement. Notwithstandling the forgoing, the Town shall require the contractor to add the Village as an additional insured on the contractor's general liability coverage.

7. Notice. Any notice or offer or demand required to be sent hereunder shall be personally delivered or sent by United States mail at the Parties' respective addresses set forth below. Each notice shall be deemed to have been received on the date of postmark, if sent by certified mail, postage prepaid, and addressed to:

	Address
Town of Vandebroek	Town of Vandenbroek W2030 County Road JJ Kaukauna, WI 54130
Village of Little Chute	Village Administrator 108 W Main St Little Chute, WI 54140

8. Final Agreement. This Agreement constitutes the entire agreement of the Parties with respect to the subject matter hereof, and may only be modified or supplemented by an additional writing between the Parties. This Agreement shall be governed by, construed, interpreted, and enforced in accordance with the laws of the State of Wisconsin.

9. Severability. The invalidity of any provision of this Agreement shall not impair or affect in any manner the validity, enforceability or effect of the rest of this Agreement.

10. Construction. The Parties acknowledge that this Agreement is the product of negotiations between the Parties and that, prior to the execution hereof, each Party has had full and adequate opportunity to have this Agreement reviewed by, and to obtain the advice of, its own legal counsel with respect hereto. Nothing in this Agreement shall be construed more strictly for or against, any Party because that Party's attorney drafted this Agreement or any part hereof.

11. Miscellaneous.

a. This Agreement may be executed in one or more counterparts, each or which shall be deemed an original, and all of which taken together shall constitute one and the same Agreement.

b. All addenda and exhibits attached to this Agreement shall be considered part of this Agreement and the terms and conditions in such addenda and exhibits shall be binding upon all parties.

c. This Agreement is intended to benefit the parties hereto and their respective officials and shall not be construed to create any right or benefit on behalf of any person, firm, corporation or other entity not a party hereto.

d. Each party warrants for itself that it has complied with all applicable statutes, rules, orders, ordinances, regulations and requirements to execute this Agreement and that the person executing this Agreement on its behalf is authorized to do so.

e. The parties agree to comply with all applicable state and federal laws in performing under this agreement, including but not limited to any applicable wage laws and public bidding laws.

d. No member of either governing body or other official of either Party shall have any financial interest, direct or indirect, in this Agreement, or any contract, agreement, or other transaction contemplated to occur or be undertaken thereunder or with respect thereto, nor shall any such member of the governing body or other such official participate in any decision relating to this Agreement which affects his/her personal interest or the interests of any corporation, partnership, or association in which he/she is directly or indirectly interested. No member, official, or employee of either Party shall be personally liable in the event of any default or breach on any obligation of a Party under this Agreement.

e. This Agreement shall be construed in accordance with the internal laws of the State of Wisconsin.

IN WITNESS WHEREOF, the parties have executed this AGREEMENT effective as of the last date of signature below.

TOWN OF VANDENBROEK

By: _____ _____

Jason Wegand, Chairman Date

ATTEST: _____ _____
Cory Swedberg, Clerk Date

VILLAGE OF LITTLE CHUTE

By: _____ _____
Date

ATTEST: _____ _____
Laurie Decker, Clerk Date

Chuck Koehler <CKoehler@herrlingclark.com>
To Beau Bernhoft
Cc Tyler Claringbole; Chris Murawski

Hi Beau,

Comparing the Agreement sent to me today, against the 4 recommendations as I brought to your attention on May 9th at 9:09 a.m. by email, I note the following:

Recommendations

1. Village engineering feature for asphalt and drainage on existing bridge. **Added** in paragraph 2.
2. Split bid procedure. **Not added** for this low risk very small project.
3. Final inspection and rights of enforcement for Village. **Not added** for this low risk very small project.
4. Additional insured. **Added** as last sentence of paragraph 6.

Conclusion

I approve it as amended based on our previous discussions.

Thank you.

Attorney Charles D. Koehler
Herrling Clark Law Firm Ltd.
800 N. Lynndale Drive
Appleton, WI 54914
920.882.3227 (Telephone)
920.739.6352 (Fax)
www.herrlingclark.com

From: Beau Bernhoft <beau@littlechutewi.org>
Sent: Thursday, May 19, 2022 8:40 AM
To: Chuck Koehler <CKoehler@herrlingclark.com>
Subject: IGA Review - Town of VB

Good morning Chuck,

Here is the final version of the IGA for Buchanan Road for your review. Please let me know if you have any questions.

Thank you,
Beau

OPINION OF PROBABLE COST
2022

Owner:	VILLAGE OF LITTLE CHUTE	**Engineer:**	DEM
Project Name:	Buchanan Sidewalk		
Contract No.			
Bid Date:	Prices Updated 4/2022		
Bid Time:			
Project Manager:			

Description - Sidewalk
Total Project Length = 750 feet

SANITARY SEWER

Item	Qty	Unit	Description	Unit Price	Total
1	2	EA	Adjust Sanitary Manholes	$1,000.00	$2,000.00
2	1	EA	Rotate Sanitary Sewer Manhole Cone	$1,500.00	$1,500.00
			SUB-TOTAL (Items 1 through 2, Inclusive)		**$3,500.00**

STORM SEWER

Item	Qty	Unit	Description	Unit Price	Total
3	35	LF	12" Storm Sewer Main	$71.27	$2,494.45
4	40	LF	15" Storm Sewer Main	$75.00	$3,000.00
5	150	LF	18" Storm Sewer Main	$85.00	$12,750.00
6	8	VF	4 Ft Dia Standard Storm Sewer Inlet Manhole	$450.00	$3,375.00
7	3	EA	Type "H" Catch Basin Including: Frame (R-3067) & Grate	$2,800.00	$8,400.00
8	1	EA	30" Dia Field Inlet Including: Frame & Grate, Complete in Place	$2,000.00	$2,000.00
9	1	EA	12" Apron End Wall With Trash Guard	$1,200.00	$1,200.00
10	1	EA	18" Apron End Wall With Trash Guard	$1,500.00	$1,500.00
11	1	EA	Adjust Existing Storm Manhole	$1,000.00	$1,000.00
12	2	EA	Connect To Existing 18" Storm Sewer	$1,200.00	$2,400.00
13	1	EA	Connect To Existing Storm Sewer Inlet	$1,500.00	$1,500.00
14	1	EA	Remove Existing Yard Drain	$1,000.00	$1,000.00
15	1	LS	Construction Staking (Storm)	$2,000.00	$2,000.00
			SUB-TOTAL (Items 3 through 15, Inclusive)		**$42,619.45**

WATER MAIN

Item	Qty	Unit	Description	Unit Price	Total
16	5	EA	Adjust Water Main Valve	$300.00	$1,500.00
17	1	EA	Adjust Water Main Manhole	$1,000.00	$1,000.00
			SUB-TOTAL (Items 16 through 17, Inclusive)		**$2,500.00**

.

PAVING

Item	Qty	Unit	Description	Unit Price	Total
18	1,037	SY	Removing Asphalt Pavement	$5.00	$5,185.00
19	25	SY	Removing Concrete Pavement	$12.00	$300.00
20	155	LF	Removing Curb and Gutter	$12.00	$1,860.00
21	300	CY	Common Excavation	$14.25	$4,275.00
22	2,655	SF	4" Concrete Sidewalk & Carriage Walk, Including 3" Aggregate Base	$9.00	$23,895.00
23	390	SF	6" Concrete Driveway and Sidewalk, Including 3" Aggregate Base	$11.00	$4,290.00
24	950	CY	Base Aggregate Dense 1-1/4 inch	$32.00	$30,400.00
25	50	CY	Breaker Run	$45.00	$2,250.00
26	15	EA	Drilled #6 Tie Bars	$10.00	$150.00
27	575	L.F.	Concrete Curb and Gutter 30 Inch - Standard	$32.00	$18,400.00
28	60	L.F.	Concrete Curb and Gutter 30 Inch - Mountable	$45.00	$2,700.00
29	1	L.S.	Water (For Compaction and Dust Control)	$2,000.00	$2,000.00
30	1,365	S.Y.	HMA Pavement 3 LT 58-28 S (3-1/4" Asphalt Binder Course)	$33.00	$45,045.00
31	1,365	S.Y.	HMA Pavement 4 LT 58-28 S (1-3/4" Asphalt Surface Course)	$23.00	$31,395.00
32	665	S.Y.	4" Topsoil, Seed, Fertilizer, & Mulch	$11.00	$7,315.00
33	825	L.F.	Saw Cut Pavement	$3.00	$2,475.00
34	1	L.S.	Street Sweeping	$1,000.00	$1,000.00
35	1	EA	Relocate Sign	$500.00	$500.00
36	1	L.S.	Street Lights	$30,000.00	$30,000.00
37	1	L.S.	Construction Staking (Paving)	$4,000.00	$4,000.00
			SUB-TOTAL (Items 18 through 37, Inclusive)		**$217,435.00**

Construction Cost	**$266,054.45**
Engineering and Contingencies (20%)	$53,210.89
Annualized Inflation (0%)	$0.00
Total Project Cost	**$319,265.34**

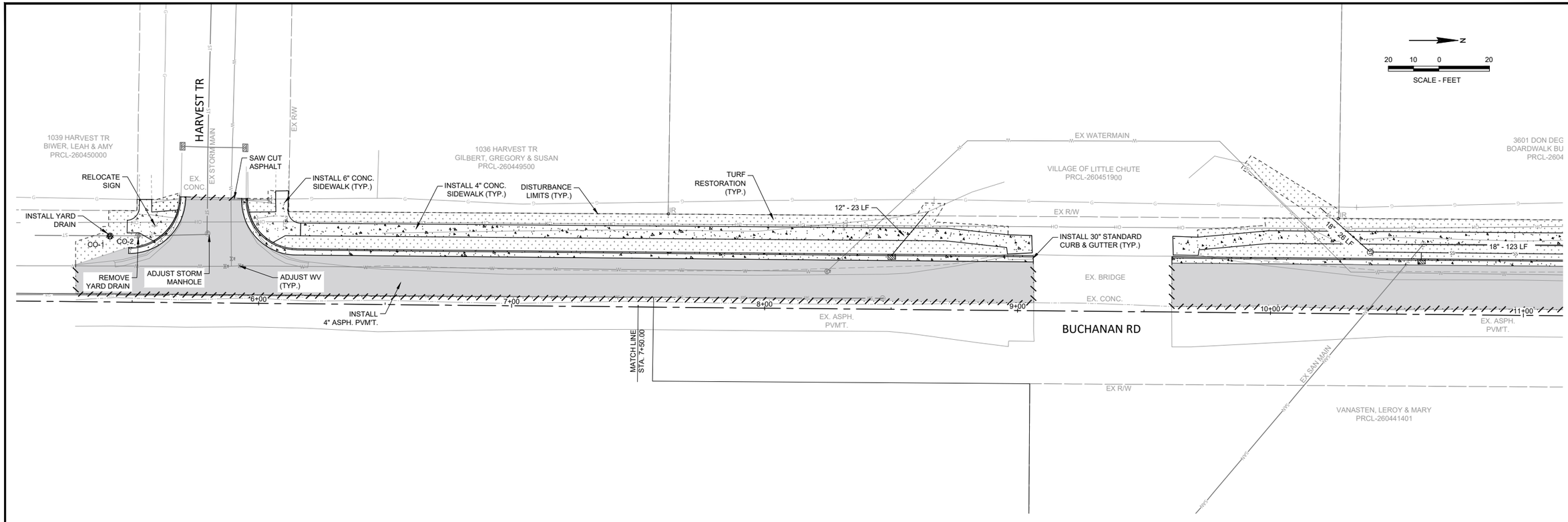

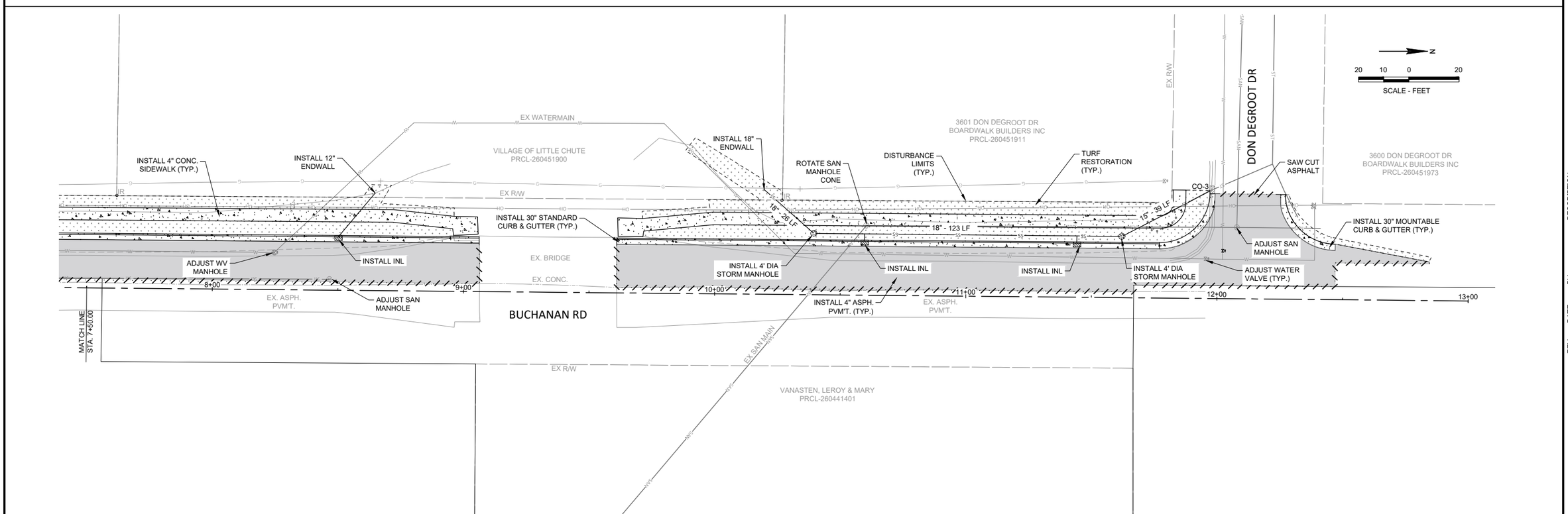

Little Chute
ESTABLISHED 1848

ENGINEERING DEPARTMENT
108 WEST MAIN STREET
LITTLE CHUTE, WISCONSIN 54140

SIDEWALK CONSTRUCTION
BUCHANAN ST
STA. 5+00 TO 13+00
VILLAGE OF LITTLE CHUTE, WISCONSIN

REV	DATE	BY	DESCRIPTION

DESIGNED:
DRAWN: DEM
CHECKED: REO
APPROVED: CLM

PROJECT NUMBER
EX

SHEET REFERENCE NO.
EX

Q:\Dept of Public Works\Engineering Department\2000 - Municipal Projects\Buchanan Street - Sidewalk\10 - DWG\SHEETS\BUCHANAN SIDEWALK.dwg, 4/25/2022 8:51:18 AM, DAVID MATTSON, acad.ctb

Item For Consideration

For Board Review On: June 1st, 2022 **Prepared On:** May 25th. 2022
Agenda Item Topic: Pheasant Run Storm Project Update **Prepared By:** Admin. Bernhoft

Report: Our Engineering Department has applied to the Wisconsin Department of Natural Resources (WDNR) for the Pheasant Run storm project. Our proposal was to replace a gabion lined channel with a storm sewer pipe (enclose the system). WDNR concluded that the system is to remain an open channel. WDNR recommended to proceed with a stream restoration project with a natural bank. WDNR informed staff that if we proceed with the application attached it would be denied with no return of our application fee.

Staff has reviewed their alternative option. A natural stream restoration is extremely difficult due to the proximity of single-family homes. Any restoration would require the Village to secure easements abutting right up to the homes. Any natural restoration would also require a specialist consultant to design. Staff recommends not proceeding with a natural stream restoration project currently for our community considering the cost and benefits. The area will be monitored for future consideration.

Fiscal Impact: Remove the 2022 Budget since this project will not move forward.

<u>Stormwater Utility</u>
Construction (Expense) - $275,385
Net Position (Equity) + $275,385

Recommendation/Board Action: Staff recommends withdrawing our application from the WDNR (application fee will be refunded) and approve a budget amendment to remove the construction funds from our 2022 Budget.

Respectfully Submitted,
Beau Bernhoft, Village Administrator

PHEASANT RUN STORM SEWER
PHEASANT RUN
VILLAGE OF LITTLE CHUTE

OUTAGAMIE COUNTY, WISCONSIN

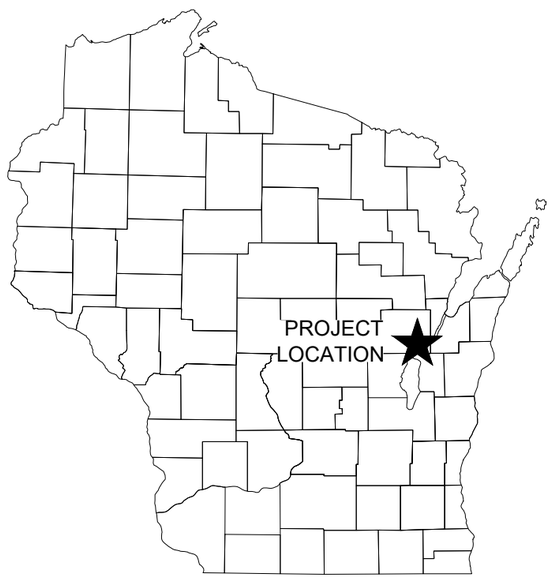

NOT TO SCALE

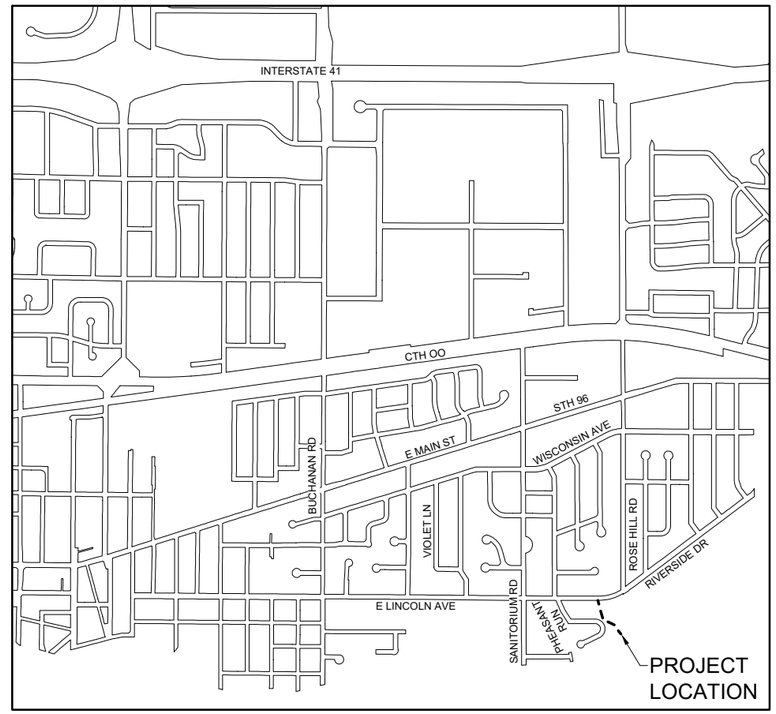

Little Chute
ESTABLISHED 1848

ENGINEERING DEPARTMENT
108 WEST MAIN STREET
LITTLE CHUTE, WISCONSIN 54140

VILLAGE OF LITTLE CHUTE STAFF

Village Engineer:
Christopher L. Murawski, P.E.
Engineering Department
108 West Main Street
Little Chute, Wisconsin 54140

chris@littlechutewi.org

Office Phone: (920) 423-3861
Cell Phone: (920) 841-0042

Engineering Technician:
Kris Lyons, CPESC
Engineering Department
108 West Main Street
Little Chute, Wisconsin 54140

kris@littlechutewi.org

Office Phone: (920) 423-3864
Cell Phone: (920) 422-4840

Engineering Technician:
Rob Olkiewicz
Engineering Department
108 West Main Street
Little Chute, Wisconsin 54140

rob@littlechutewi.org

Office Phone: (920) 423-3866
Cell Phone: (920) 422-1947

Engineering Technician:
Dave Mattson
Engineering Department
108 West Main Street
Little Chute, Wisconsin 54140

david@littlechutewi.org

Office Phone: (920) 423-3863
Cell Phone: (920) 378-4395

Engineering Technician:
Bryan Blum
Engineering Department
108 West Main Street
Little Chute, Wisconsin 54140

bryan@littlechutewi.org

Office Phone: (920) 423-3862
Cell Phone: (920) 422-0938

DRAWING INDEX

REFERENCE NO.	DESCRIPTION
0.0	COVER SHEET
1.0	ABREVIATIONS, LEGEND & NOTES
1.1	SURVEY CONTROL & PROPERTY OWNER INFO
2.0	UTILITIES - PLAN AND PROFILE
3.0 - 3.3	GRADING PLAN
4.0	EROSION CONTROL, DEMOLITION, AND PAVING
5.0 - 5.10	MISCELLANEOUS CONSTRUCTION DETAILS
6.0	QUANITY SHEET
7.0	STORM SEWER MODELING

UTILITY CONTACT INFORMATION

AT&T MIDWEST (TELEPHONE)
KYLE WEBER
205 S. JEFFERSON STREET
GREEN BAY, WI 54301
920-221-5969
KW715W@ATT.COM

CHARTER (CABLE)
VINCE ALBIN
3520 DESTINATION DRIVE
APPLETON, WI 54915
920-378-0444
VINCE.ALBIN@CHARTER.COM

KAUKAUNA UTILITIES (ELECTRIC)
BRIAN WILLMS
777 ISLAND STREET
KAUKAUNA, WI 54130
920-462-0222
BWILLMS@KU-WI.ORG

WE ENERGIES (GAS)
HEATHER DEUTH
800 S. LYNNDALE DRIVE
APPLETON, WI 54912
Office: 920-380-3464
Cell: 920-242-5633
HEATHER.DEUTH@WE-ENERGIES.COM

WE ENERGIES (ELECTRIC)
ZACH DUGA
800 S. LYNNDALE DRIVE
APPLETON, WI 54912
Office: 920-380-3458
Cell: 920-450-9314
ZACHARY.DUGA@WE-ENERGIES.COM

FOX VALLEY METRO POLICE
200 W. MCKINLEY AVE
LITTLE CHUTE, WI 54140
NON EMERGENCY
920-788-7505

LITTLE CHUTE FIRE DEPARTMENT
200 W. MCKINLEY AVE
LITTLE CHUTE, WI 54140
NON EMERGENCY
920-788-7399

MIDWEST CONTRACT OPERATIONS (WATER)
JERRY VERSTEGEN
625 E. EVERGREEN DRIVE
LITTLE CHUTE, WI 54140
920-788-7522

DIGGERS HOTLINE
Dial 811 or (800)242-8511
www.DiggersHotline.com

ISSUED

DATE	DESCRIPTION

PROJECT NUMBER: XXXXXXX

Q:\Dept of Public Works\Engineering Department\2000 - Municipal Projects\Pheasant Run - Riverside Dr Easements\10 - DWG\SHEETS\0.0_PHEASANT RUN STORM Cover Sheet.dwg; 2/23/2022 9:33:10 AM; KRIS LYONS; _Little Chute-C3D-2018.ctb

EXISTING SYMBOLS

- BENCHMARK
- CONTROL POINT
- MAILBOX
- STORM MANHOLE
- SANITARY MANHOLE
- ELECTRIC MANHOLE
- WATER VALVE
- HYDRANT
- GAS VALVE
- ELECTRICAL BOX or PEDESTAL
- TELEPHONE BOX or PEDESTAL
- FIBER OPTIC PEDESTAL
- POWER POLE
- LIGHT POLE
- SIGN
- WATER MANHOLE
- TELEPHONE MANHOLE
- GUY WIRE
- CLEAN OUT
- CONIFEROUS TREE or BUSH
- DECIDUOUS TREE or BUSH
- STUMP
- CURB STOP
- STORM SEWER CATCH BASIN or INLET
- RIPRAP
- SECTION CORNER
- IRON PIPE
- PK NAIL
- CULVERT END SECTION
- LIGHT POLE W/ MAST ARM
- AIR CONDITIONER
- BOLLARD
- FLAG POLE (FLAG)
- MONITORING WELL
- SPRINKLER HEAD
- SIGNAL BOX
- RAILROAD SIGNAL FLASHER
- TRAFFIC SIGNAL
- COMMUNICATIONS VAULT
- ELECTRIC CABINET
- UTILITY METER
- FIBER OPTIC VAULT
- SOIL BORING (BORE)
- DELINEATOR POST
- WATER SURFACE ELEVATION

EXISTING FEATURES LEGEND

- CENTERLINE OR REFERENCE LINE
- SANITARY SEWER MAIN (SAN)
- SANITARY SEWER LATERAL
- STORM SEWER MAIN (SS)
- STORM SEWER LATERAL
- STORM SEWER MINI SEWER
- WATER MAIN (W)
- WATER SERVICE
- OVERHEAD UTILITY (OH)
- UNDERGROUND TELEPHONE (T)
- UNDERGROUND ELECTRIC (E)
- UNDERGROUND FIBER OPTIC (FO)
- UNDERGROUND GAS LINE (G)
- UNDERGROUND COMMUNICATION (C)
- UNDERGROUND TELEVISION (TV)
- PAVEMENT EDGE
- GRAVEL EDGE
- DITCH CENTERLINE
- BUILDING LINE
- CHAINLINK FENCE
- GENERIC FENCE
- WOOD FENCE
- BRUSHLINE
- UTILITY EASEMENT
- DELINEATED WETLANDS
- CONCRETE CURB AND GUTTER
- CONCRETE JOINT
- GUARDRAIL
- WATER EDGE
- SIDEWALK
- MAJOR CONTOUR (750)
- MINOR CONTOUR (749)
- DRIVEWAY
- SLOPE TOP or BOTTOM
- TREELINE
- RIGHT-OF-WAY
- RAILROAD TRACKS

EROSION CONTROL LEGEND

- EROSION MAT CLASS I, TYPE A OR B
- EROSION MAT CLASS II OR III (EXCEPT II, TYPE A)
- RESTORATION W/ HYDROMULCH
- SILT FENCE (SF)
- TURBIDITY BARRIER
- TRACKOUT DEVICE
- SURFACE WATER FLOW
- EROSION BALE, BARRIER
- TEMPORARY DITCH CHECK
- RIPRAP
- EXISTING INLET INLET PROTECTION (TYPE D-HR)
- PROPOSED INLET INLET PROTECTION (TYPE D-HR)
- CULVERT PIPE CHECK

DEMOLITION/REMOVAL LEGEND

(ABAN)	ABANDON PIPE
(REMOVE)	REMOVE PIPE
	SAWCUT PAVEMENT
	REMOVE TREE
	BULKHEAD
(R)	REMOVE UTILITY STRUCTURE
(A)	ABANDON UTILITY STRUCTURE

PROPOSED SYMBOLS

- STORM MANHOLE
- OPEN GRATE INLET
- 2'x3' INLET TYPE L GRATE
- APRON ENDWALL
- SANITARY MANHOLE
- CLEAN OUT
- WATER VALVE
- HYDRANT
- WATER MANHOLE
- CURB STOP
- WATER MAIN TEE
- WATER MAIN CROSS
- WATER MAIN 90° BEND
- WATER MAIN 45° BEND
- WATER MAIN 22.5° BEND
- WATER MAIN 11.25° BEND
- WATER MAIN REDUCER
- CAP AND PLUG (UTILITY)
- SIGN
- ASPHALT
- CONCRETE SIDEWALK
- CONCRETE DRIVEWAY / RAMP
- DETECTABLE WARNING PLATE
- PLAN KEY NOTE

PROPOSED FEATURES LEGEND

- CENTERLINE OR REFERENCE LINE
- SANITARY SEWER MAIN (SAN)
- SANITARY SEWER LATERAL
- STORM SEWER MAIN (SS)
- STORM SEWER LATERAL
- WATER MAIN (W)
- WATER SERVICE
- SLOPE INTERCEPT
- CONSTRUCTION LIMITS
- CURB AND GUTTER
- INTEGRAL CURB AND GUTTER
- FENCE
- MAJOR CONTOUR (750)
- MINOR CONTOUR (749)
- EASEMENT

STANDARD ABBREVIATIONS

ABAN	ABANDON
AC	ACRE
AEW	APRON ENDWALL
AGG	AGGREGATE
ASPH	ASPHALT PAVEMENT
AVG	AVERAGE
BB	BURY BOLT
BC-BC	BACK CURB TO BACK CURB
BEG	BEGIN
BIT	BITUMINOUS
BK	BACK
B/L	BASE LINE
BLDG	BUILDING
BM	BENCH MARK
BC	BACK OF CURB
BRG	BEARING
CABC	CRUSHED AGGREGATE BASE COURSE
C-C	CENTER TO CENTER
CCW	COUNTER CLOCKWISE
CW	CLOCKWISE
CY	CUBIC YARD
C&G	CURB AND GUTTER
CB	CATCH BASIN
CE	COMMERCIAL ENTRANCE
CHD	CHORD
C/L	CENTER LINE
CL	CLASS OF PIPE
CMP	CORRUGATED METAL PIPE
CO	CLEAN OUT
CONC	CONCRETE
CORR	CORRUGATED
CP	CONTROL POINT
CPPK	CONTROL POINT NAIL
CR	CRUSHED
CS	CURB STOP
CSW	CONCRETE SIDEWALK
CTH	COUNTY TRUNK HIGHWAY
CULV	CULVERT
D	DEPTH OR DELTA
DI	DUCTILE IRON
DIA	DIAMETER
EA	EACH
EB	EASTBOUND
EBS	EXCAVATION BELOW SUBGRADE
ECC	ECCENTRIC
EG	EDGE OF GRAVEL
ELEV	ELEVATION
ELEC	ELECTRIC
EMB	EMBANKMENT
EMAT	EROSION MAT
ENT	ENTRANCE
EOR	END OF RADIUS
EP	EDGE OF PAVEMENT
EXC	EXCAVATION
EX	EXISTING
FC-FC	FACE CURB TO FACE CURB
FDN	FOUNDATION
FE	FIELD ENTRANCE
FERT	FERTILIZER
FG	FINISHED GRADE
FL	FLOW LINE
FT	FOOT
FTG	FOOTING
GRAV	GRAVEL
GN	GRID NORTH
GV	GAS VALVE
HDPE	HIGH DENSITY POLYETHYLENE
HMA	HOT MIX ASPHALT
HP	HIGH POINT
HPPP	HIGH PERFORMANCE POLYPROPYLENE
HT	HEIGHT
HYD	HYDRANT
ID	INSIDE DIAMETER or INCH DIAMETER
IN	INCH
INL	INLET
INV	INVERT
IP	IRON PIPE
JCT	JUNCTION
LAT	LATERAL
LB	POUND
LF	LINEAR FOOT
LP	LIGHT POLE
LT	LEFT
LVC	LENGTH OF VERTICAL CURVE
MAINT	MAINTENANCE
MAT'L	MATERIAL
MAX	MAXIMUM
MIN	MINIMUM
MH	MANHOLE
NB	NORTHBOUND
NO	NUMBER
NOR	NORMAL
OD	OUTSIDE DIAMETER
PAV'T	PAVEMENT
PC	POINT OF CURVATURE
PCC	PORTLAND CEMENT CONCRETE
PE	PRIVATE ENTRANCE
PED	PEDESTAL
PGL	PROFILE GRADE LINE
PI	POINT OF INTERSECTION
P/L	PROPERTY LINE
PP	POWER POLE
PRC	POINT OF REVERSE CURVATURE
PROP	PROPOSED
PSI	POUNDS PER SQUARE INCH
PT	POINT OF TANGENCY
PVC	POLYVINYL CHLORIDE or POINT OF VERTICAL CURVATURE
PVI	POINT OF VERTICAL INTERSECTION
PVT	POINT OF VERTICAL TANGENCY
R	RADIUS
RCP	REINFORCED CONCRETE PIPE
RD	ROAD
REBAR	REINFORCEMENT ROD
REM	REMOVE
RECON	RECONSTRUCT
REQ'D	REQUIRED
R/L	REFERENCE LINE
RP	RADIUS POINT
RR	RAILROAD
RT	RIGHT
R/W	RIGHT-OF-WAY
RW	RETAINING WALL
SB	SOUTHBOUND
SE	SUPERELEVATION
SF	SQUARE FEET
SI	SLOPE INTERCEPT
SP	SUMP PUMP
STH	STATE TRUNK HIGHWAY
SY	SQUARE YARD
SALV	SALVAGED
SAN	SANITARY
SEC	SECTION
SHLDR	SHOULDER
S/L	SURVEY LINE
SQ	SQUARE
SS	STAINLESS STEEL
STA	STATION
STD	STANDARD
STO	STORM
SW	SIDEWALK
SWR	SEWER
TC	TOP OF CURB
TEL	TELEPHONE
TEMP	TEMPORARY
TLE	TEMPORARY LIMITED EASEMENT
TV	TELEVISION
TYP	TYPICAL
UG	UNDERGROUND
ULO	UTILITY LOCATE OPENING
USH	U.S. HIGHWAY
VAR	VARIES
VC	VERTICAL CURVE
VCP	VITRIFIED CLAY PIPE
VERT	VERTICAL
W/	WITH
WB	WESTBOUND
WM	WATER MAIN
WV	WATER VALVE

GENERAL CONSTRUCTION NOTES

1. THE UTILITIES SHOWN IN PLAN AND PROFILE ARE INDICATED IN ACCORDANCE WITH AVAILABLE RECORDS. THE CONTRACTOR SHALL BE RESPONSIBLE FOR OBTAINING EXACT LOCATIONS AND ELEVATIONS OF ALL UTILITIES, INCLUDING ANY PRIVATE UTILITIES, FROM THE OWNERS OF THE RESPECTIVE UTILITIES. ALL UTILITIES SHALL BE NOTIFIED 72 HOURS PRIOR TO EXCAVATION.
2. PRIOR TO CONSTRUCTION, THE CONTRACTOR SHALL VERIFY PROPOSED SITE GRADES BY FIELD CHECKING TWO (2) BENCHMARKS AND A MINIMUM OF ONE (1) SITE FEATURE AS SHOWN ON THESE PLANS. THE CONTRACTOR SHALL IMMEDIATELY NOTIFY THE VILLAGE OF ANY VERTICAL DISCREPANCY.
3. ALL WORK PERFORMED IN THE RIGHT OF WAY, EASEMENTS, OR VACATED RIGHT OF WAY SHALL CONFORM TO THE VILLAGE OF LITTLE CHUTE PROJECT SPECIFICATIONS.
4. THE PROPERTY LINES, RIGHT-OF-WAY LINES AND OTHER PROPERTY INFORMATION ON THIS DRAWING WERE DEVELOPED OR OBTAINED AS PART OF THE COUNTY GEOGRAPHIC INFORMATION SYSTEM OR THROUGH THE COUNTY PROPERTY TAX MAPPING FUNCTION THEREFORE, THIS INFORMATION DOES NOT GUARANTEE TO BE CORRECT, CURRENT OR COMPLETE. THE PROPERTY AND RIGHT-OF-WAY INFORMATION IS INTENDED FOR USE AS A GENERAL REFERENCE AND IS NOT INTENDED OR SUITABLE FOR SITE-SPECIFIC USES. ANY USE TO THE CONTRARY OF THE ABOVE STATED USES IS THE RESPONSIBILITY OF THE USER AND SUCH USE IS AT THE USER'S OWN RISK.
5. NO TREES OR SHRUBS ARE TO BE REMOVED WITHOUT PRIOR APPROVAL FROM THE OWNER.
6. A SAWED JOINT IS REQUIRED WHERE NEW ASPHALTIC PAVEMENT MATCHES EXISTING ASPHALTIC CONCRETE SURFACE.
7. ALL CURB RADII SHOWN ON THE PLAN SHEETS ARE TO THE BACK OF CURB UNLESS OTHERWISE NOTED.
8. TRUCKS SHALL TAKE THE SHORTEST ROUTE TO THE NEAREST TRUCK ROUTE. ROUTES SHALL BE ON CONCRETE PAVEMENT ONLY, UNLESS OTHERWISE APPROVED BY THE VILLAGE ENGINEERING DEPARTMENT.

EROSION AND SEDIMENT CONTROL PLAN

BEST MANAGEMENT PRACTICES:
THE CONTRACTOR IS RESPONSIBLE FOR FURNISHING, INSTALLING, MAINTAINING AND REMOVING BEST MANAGEMENT PRACTICES IN ACCORDANCE WITH THE WISCONSIN DEPARTMENT OF NATURAL RESOURCES (DNR) TECHNICAL STANDARDS. THESE STANDARDS MAY BE FOUND ON THE DNR WEBSITE AT https://www.dnr.wi.gov/topic/stormwater/standards/const_standards.html
RIP-RAP SHALL BE IN ACCORDANCE WITH SECTION 606 OF THE WISCONSIN DEPARTMENT OF TRANSPORTATION STANDARD SPECIFICATIONS FOR HIGHWAY AND STRUCTURE CONSTRUCTION, LATEST EDITION UNTIL TECHNICAL STANDARD 1065 IS COMPLETED BY THE DNR. THE MINIMUM BEST MANAGEMENT PRACTICES SPECIFIED FOR THIS PROJECT ARE AS FOLLOWS:

[✓]	LAND APPLICATION OF POLYACRYLMAIDE (1050)	[✓]	DE-WATERING (1061)
[ ]	WATER APPLICATION OF ADDITIVES FOR SEDIMENT CONTROL (1051)	[✓]	DITCH CHECK (1062)
[✓]	NON-CHANNEL EROSION MAT (1052)	[ ]	SEDIMENT TRAP (1063)
[✓]	CHANNEL EROSION MAT (1053)	[ ]	SEDIMENT BASIN (1064)
[ ]	VEGETATIVE BUFFER (1054)	[✓]	RIP-RAP (1065)
[ ]	SEDIMENT BALE BARRIER (1055)	[ ]	CONSTRUCTION DIVERSION (1066)
[✓]	SILT FENCE (1056)	[ ]	GRADING PRACTICES (1067)
[✓]	TRACKOUT CONTROL PRACTICES (1057)	[✓]	DUST CONTROL (1068)
[✓]	MULCHING (1058)	[✓]	TURBIDITY BARRIER (1069)
[✓]	SEEDING (1059)	[ ]	SILT CURTAIN (1070)
[✓]	STORM DRAIN INLET PROTECTION (1060)	[ ]	MANUFACTURED PERIMETER PRODUCTS (1071)

THE CONTRACTOR SHALL COORDINATE CONSTRUCTION ACTIVITIES AND IMPLEMENT BEST MANAGEMENT PRACTICES TO PREVENT OR REDUCE ALL OF THE FOLLOWING:

A. DEPOSITION OF TRACKING OF SOIL ONTO STREETS BY VEHICLES.
B. DISCHARGE OF SEDIMENT INTO STORM WATER INLETS.
C. DISCHARGE OF SEDIMENT INTO ADJACENT STREAMS, RIVERS, LAKES AND WETLANDS.
D. DISCHARGE OF SEDIMENT FROM DITCHES AND STORM SEWERS THAT FLOW OFFSITE.
E. DISCHARGE OF SEDIMENT FROM DEWATERING ACTIVITIES.
F. DISCHARGE OF SEDIMENT FROM SOIL STOCKPILES EXISTING FOR SEVEN (7) DAYS OR MORE.
G. DISCHARGE OF SEDIMENT FROM EROSIVE OUTLET FLOWS.
H. TRANSPORT OF CHEMICALS, CEMENT AND BUILDING MATERIALS BY RUNOFF.
I. TRANSPORT OF UNTREATED VEHICLE AND WHEEL WASH WATER BY RUNOFF

THE CONTRACTOR SHALL IMPLEMENT THE FOLLOWING PREVENTATIVE MEASURES:

A. PRESERVE EXISTING VEGETATION WHENEVER POSSIBLE.
B. MINIMIZE SOIL COMPACTION AND PRESERVE TOPSOIL.
C. MINIMIZE LAND DISTURBANCES ON SLOPES OF 20% OR MORE.
D. MINIMIZE THE AMOUNT OF SOIL EXPOSED AT ANY ONE TIME.
E. DIVERT CLEAR WATER AWAY FROM EXPOSED SOILS.
F. TEMPORARILY STABILIZE EXPOSED SOILS THAT WILL NOT BE ACTIVE FOR 14 DAYS OR MORE. USE MULCHING, SEEDING, POLYACRYLAMIDE OR GRAVELING TO STABILIZE.
G. PERMANENTLY STABILIZE EXPOSED SOILS AS SOON AS POSSIBLE.
H. CONTRACTOR SHALL EDUCATE ITS EMPLOYEES AND SUBCONTRACTORS ABOUT PROPER SPILL PREVENTION AND RESPONSE PROCEDURES. IF A SPILL OCCURS, THE CONTRACTOR SHALL EVACUATE THE AREA AND IMMEDIATELY NOTIFY THE LOCAL MUNICIPALITY, FIRE DEPARTMENT OR 911 EMERGENCY SYSTEM. IF NO FIRE, EXPLOSION OR LIFE / HEALTH SAFETY HAZARD EXISTS, THE NEXT STEP IS TO CONTAIN THE SPILL AND PERFORM CLEANUP. USE DRY CLEANUP METHODS, NOT WET.

THE CONTRACTOR IS RESPONSIBLE FOR REPAIRING OR REPLACING BEST MANAGEMENT PRACTICES DESTROYED AS A RESULT OF CONSTRUCTION ACTIVITIES BY THE END OF THE WORK DAY. THE CONTRACTOR IS RESPONSIBLE FOR REPLACING BEST MANAGEMENT PRACTICES TEMPORARILY REMOVED FOR CONSTRUCTION ACTIVITY AS SOON AS THOSE ACTIVITIES ARE COMPLETED. THE CONTRACTOR IS RESPONSIBLE FOR REMOVING AND DISPOSING OF TEMPORARY BEST MANAGEMENT PRACTICES AFTER CONSTRUCTION IS COMPLETE AND PERMANENT VEGETATION IS ESTABLISHED.

INSPECTION & MAINTENANCE:

THE CONTRACTOR IS RESPONSIBLE FOR INSPECTING BEST MANAGEMENT PRACTICES WEEKLY, AND WITHIN 24 HOURS FOLLOWING A RAINFALL OF 0.5 INCHES OR GREATER. WRITTEN DOCUMENTATION OF EACH INSPECTION SHALL BE KEPT AT THE CONSTRUCTION SITE AND SHALL INCLUDE THE FOLLOWING INFORMATION: DATE, TIME, AND LOCATION OF INSPECTION; NAME OF INDIVIDUAL WHO PERFORMED THE INSPECTION; AN ASSESSMENT OF THE CONDITION OF BEST MANAGEMENT PRACTICES; A DESCRIPTION OF THE ANY BEST MANAGEMENT PRACTICE IMPLEMENTATION AND MAINTENANCE PERFORMED; AND A DESCRIPTION OF THE PRESENT PHASE OF CONSTRUCTION. THE CONTRACTOR IS RESPONSIBLE FOR MAINTAIN, REPAIRING, OR REPLACING BEST MANAGEMENT PRACTICES AS NECESSARY WITHIN 24 HOUR OF AN INSPECTION OR NOTIFICATION. THE CONTRACTOR IS RESPONSIBLE FOR INSPECTION, MAINTAINING, REPAIRING, OR REPLACING BEST MANAGEMENT PRACTICES UNTIL ALL LAND DISTURBING ACTIVITY IS COMPLETED AND A UNIFORM PERENNIAL VEGETATIVE COVER IS ESTABLISHED WITH A DENSITY OF AT LEAST 70%

THE CONTRACTOR IS RESPONSIBLE FOR POSTING THE PERMIT IN A CONSPICUOUS LOCATION ON THE CONSTRUCTION SITE. THE CONTRACTOR IS RESPONSIBLE FOR KEEPING A COPY OF THE APPROVED REPORTS, PLANS, AMENDMENTS, INSPECTION REPORTS, AND PERMITS AT THE CONSTRUCTION SITE AT ALL TIMES UNTIL ALL LAND DISTURBING CONSTRUCTION ACTIVITY IS COMPLETED AND A UNIFORM PERENNIAL VEGETATIVE COVER IS ESTABLISHED WITH A DENSITY OF AT LEAST 70%. THE CONTRACTOR IS RESPONSIBLE FOR NOTIFYING THE OWNER WHEN THE VEGETATIVE DENSITY REACHES AT LEAST 70%. THE OWNER IS RESPONSIBLE FOR TERMINATING DNR PERMIT COVERAGE.

AMENDMENTS:

THE CONTRACTOR IS RESPONSIBLE FOR AMENDING THE EROSION & SEDIMENT CONTROL PLAN IF: THERE IS A CHANGE IN CONSTRUCTION, OPERATION OR MAINTENANCE AT THE SITE WHICH HAS THE REASONABLE POTENTIAL FOR THE DISCHARGE OF POLLUTANTS; THE ACTIONS REQUIRED BY THE PLAN FAIL TO REDUCE THE IMPACTS OF POLLUTANTS CARRIED BY CONSTRUCTION RUNOFF; OR IF THE DNR NOTIFIES THE APPLICANT OF CHANGES NEEDED IN THE PLAN. THE DNR AND OWNER SHALL BE NOTIFIED 5 WORKING DAYS PRIOR TO MAKING CHANGES TO THE PLAN.

Little Chute ESTABLISHED 1848
ENGINEERING DEPARTMENT
108 WEST MAIN STREET
LITTLE CHUTE, WISCONSIN 54140

2022 PHEASANT RUN STORM SEWER
PHEASANT RUN
ABBREVIATIONS, LEGEND & NOTES
VILLAGE OF LITTLE CHUTE, WISCONSIN

REV	DATE	BY	DESCRIPTION

DESIGNED:
DRAWN: KAL
CHECKED: REO
APPROVED: CLM

PROJECT NUMBER

SHEET REFERENCE NO.
1.0

Q:\Dept of Public Works\Engineering Department\2000 - Municipal Projects\Pheasant Run - Riverside Dr Easements\10 - DWG\SHEETS\1.0_Legend.dwg, 2/23/2022 9:33:18 AM, KRIS LYONS, _Little Chute-C3D-2018.ctb

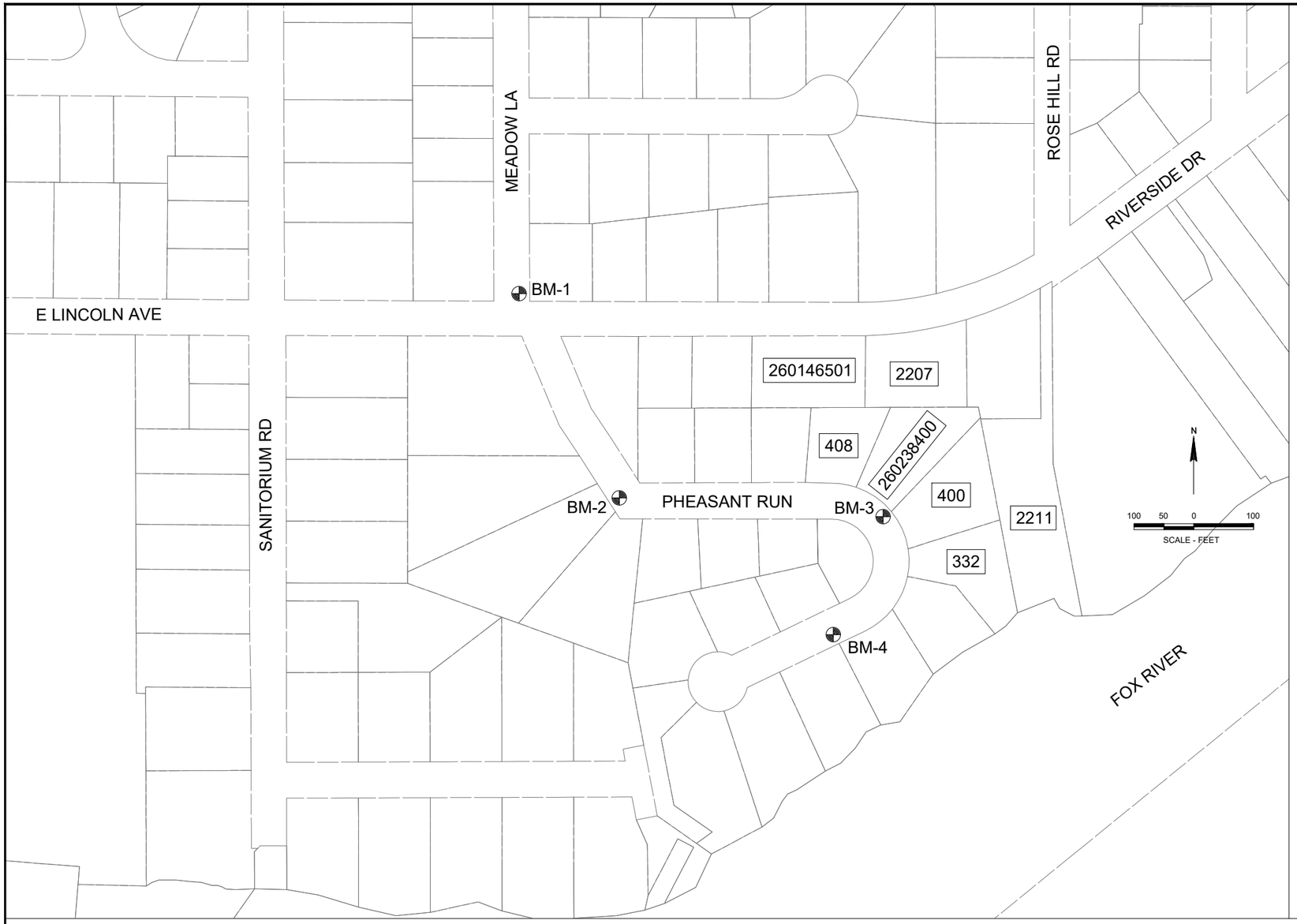

ADDRESS	OWNER NAME	PARCEL ID
2105 RIVERSIDE DR	HIETPAS, BERNARD D	260146501
2207 RIVERSIDE DR	SOUTHARD, MICHEAL & ALICIA	260147500
2207 RIVERSIDE DR	SOUTHARD, MICHEAL & ALICIA	260238400
2211 RIVERSIDE DR	TC ROME TRUST	260147401
332 PHEASANT RUN	MAUK, FAITH A	260238200
400 PHEASANT RUN	HOLETON, MICHAEL J	260238300
408 PHEASANT RUN	SOCHACKI, BRYAN & GREINER, DESIREE	260238500

HORIZONTAL DATUM

COORDINATES ON THIS PLAN ARE REFERENCED TO THE WISCONSIN COUNTY COORDINATE SYSTEM (WCCS), OUTAGAMIE COUNTY.

VERTICAL DATUM

THE VERTICAL DATUM OF THIS SURVEY IS THE NORTH AMERICAN VERTICAL DATUM OF 1988 (NAVD88), US FOOT.

VERTICAL BENCHMARKS

BM #	ELEVATION	DESCRIPTION
1	700.81	EX HYDRANT TAG BOLT
2	702.57	PK NAIL IN POWER POLE
3	670.62	PK NAIL IN POWER POLE
4	669.00	EX HYDRANT TAG BOLT

NOTE:
PRIOR TO CONSTRUCTION THE CONTRACTOR SHALL VERIFY PROPOSED SITE GRADES BY FIELD CHECKING TWO (2) BENCHMARKS AND A MINIMUM OF ONE (1) SITE FEATURE AS SHOWN ON THESE PLANS. THE CONTRACTOR SHALL IMMEDIATELY NOTIFY THE VILLAGE OF ANY VERTICAL DISCREPANCY.

Little Chute ESTABLISHED 1848
ENGINEERING DEPARTMENT
108 WEST MAIN STREET
LITTLE CHUTE, WISCONSIN 54140

2022 PHEASANT RUN STORM SEWER
PHEASANT RUN
SURVEY CONTROL & PROPERTY OWNER INFO
VILLAGE OF LITTLE CHUTE, WISCONSIN

REV	DATE	BY	DESCRIPTION

DESIGNED:
DRAWN: DEM
CHECKED: REO
APPROVED: CLM

PROJECT NUMBER
XXXXXXX

SHEET REFERENCE NO.
1.1

Q:\Dept of Public Works\Engineering Department\2000 - Municipal Projects\Pheasant Run - Riverside Dr Easements\10 - DWG\SHEETS\1.1_Control.dwg, 2/23/2022 9:33:29 AM, KRIS LYONS, _Little Chute-C3D-2018.ctb

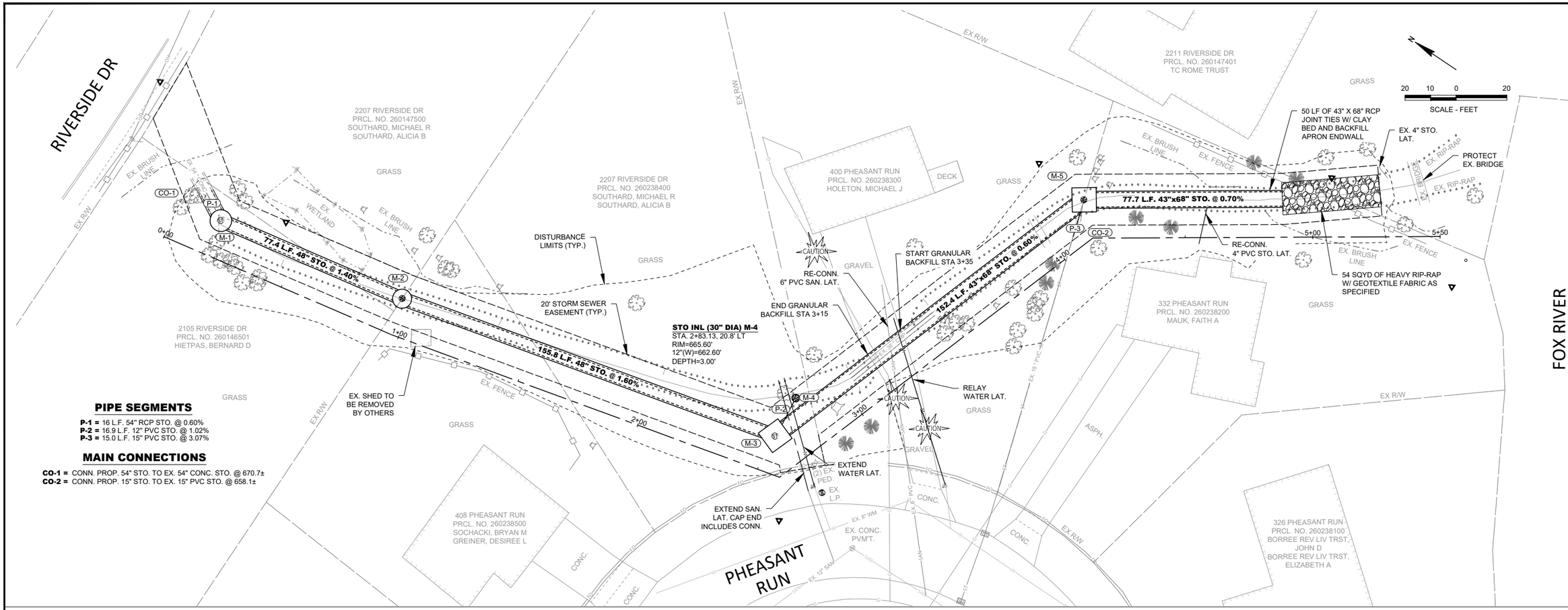

PIPE SEGMENTS

P-1 = 16 L.F. 54" RCP STO. @ 0.60%
P-2 = 16.9 L.F. 12" PVC STO. @ 1.02%
P-3 = 15.0 L.F. 15" PVC STO. @ 3.07%

MAIN CONNECTIONS

CO-1 = CONN. PROP. 54" STO. TO EX. 54" CONC. STO. @ 670.7±
CO-2 = CONN. PROP. 15" STO. TO EX. 15" PVC STO. @ 658.1±

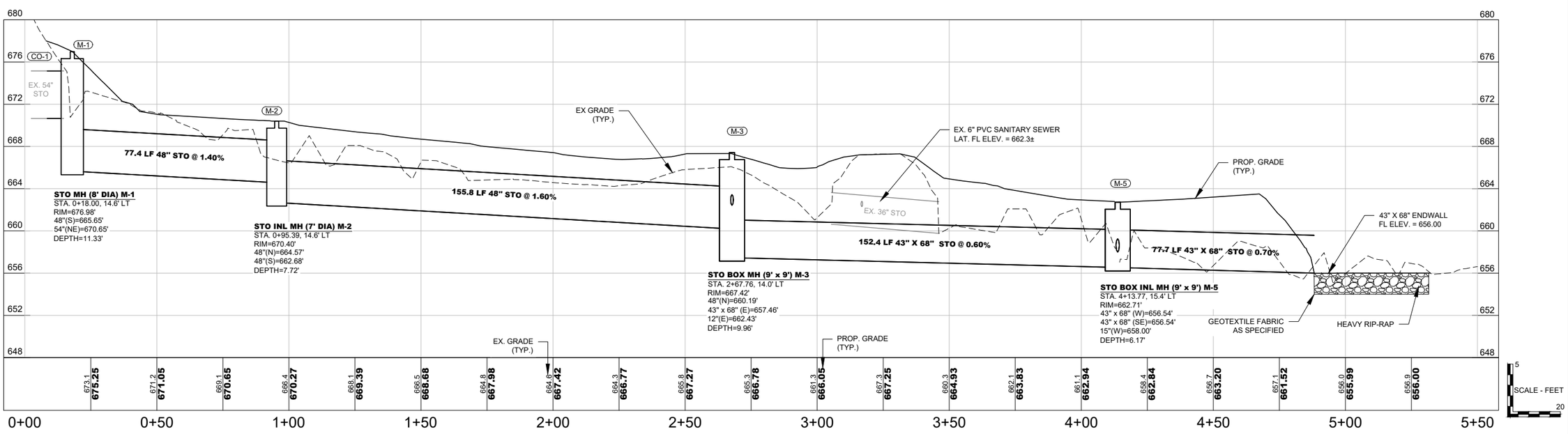

Little Chute
ESTABLISHED 1848
ENGINEERING DEPARTMENT
108 WEST MAIN STREET
LITTLE CHUTE, WISCONSIN 54140

PHEASANT RUN STORM SEWER
PROPOSED STORM SEWER
STA. 0+00 TO STA. 5+50
VILLAGE OF LITTLE CHUTE, WISCONSIN

REV	DATE	BY	DESCRIPTION

DESIGNED: DEM
DRAWN: DEM
CHECKED: REO
APPROVED: CLM

PROJECT NUMBER
XXXXXXX
SHEET REFERENCE NO.
2.0

Q:\Dept of Public Works\Engineering Department\2000 - Municipal Projects\Pheasant Run - Riverside Dr Easements\10 - DWG\SHEETS\2.0_PHEASANT RUN UTILITIES.dwg, 2/23/2022 9:33:49 AM, KRIS LYONS, _Little Chute-CSD-2018.ctb

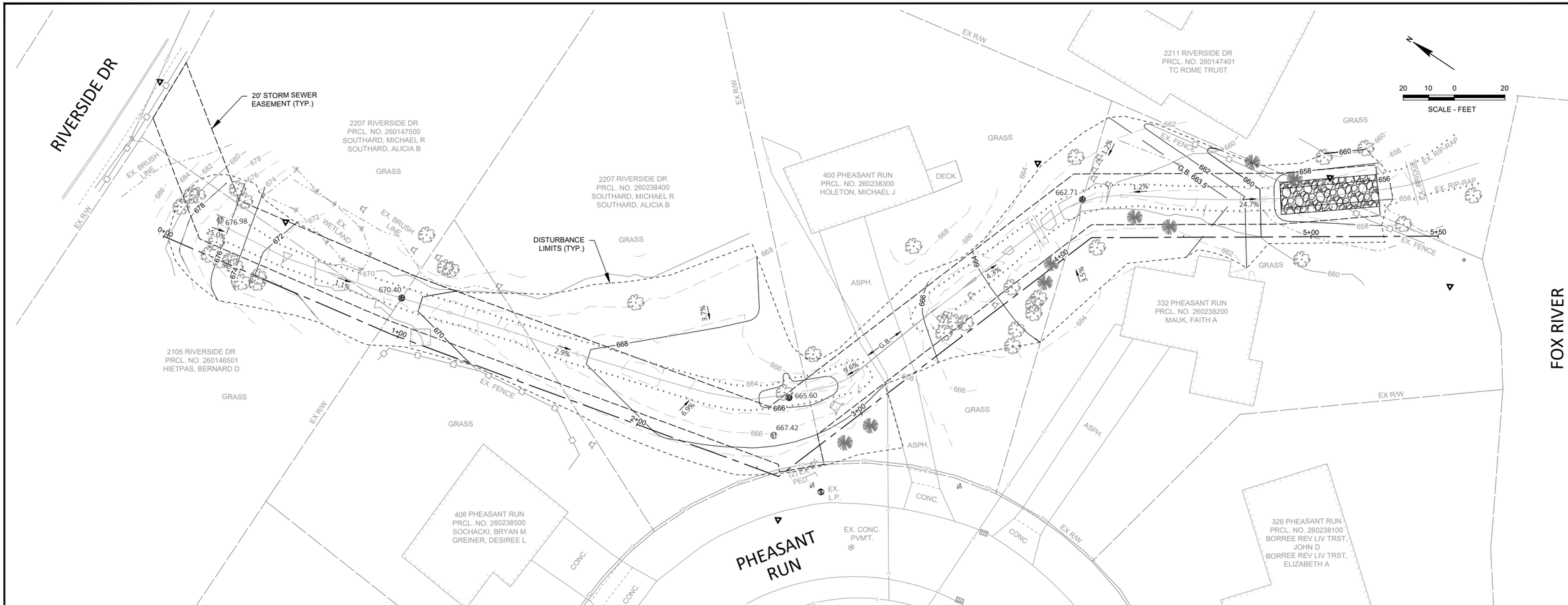

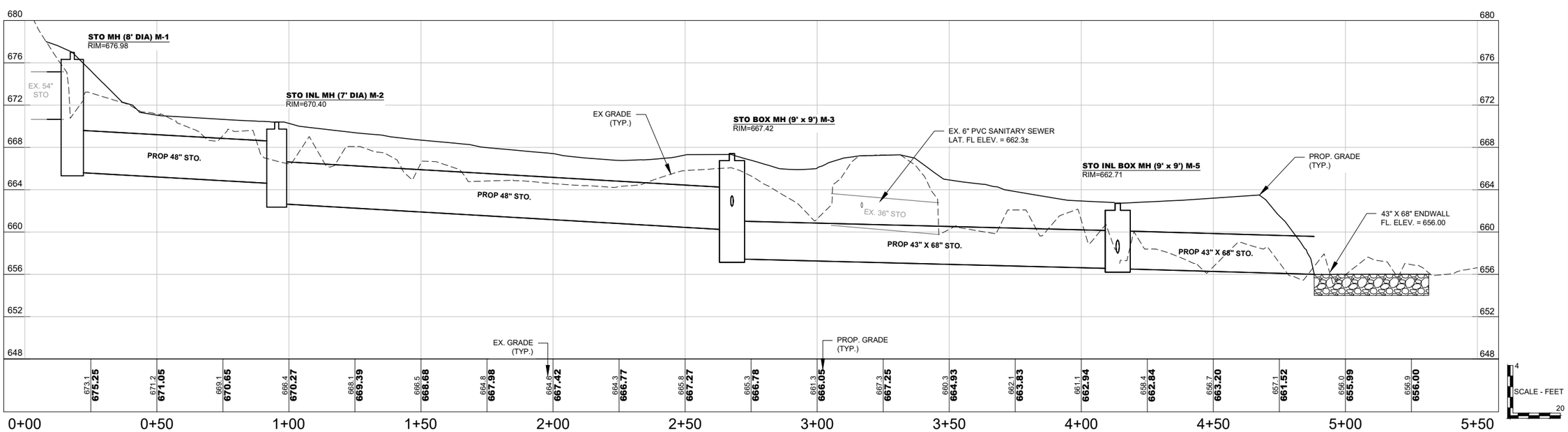

Little Chute ESTABLISHED 1848

ENGINEERING DEPARTMENT
108 WEST MAIN STREET
LITTLE CHUTE, WISCONSIN 54140

PHEASANT RUN STORM SEWER
SITE GRADING
STA. 0+00 TO STA. 5+50
VILLAGE OF LITTLE CHUTE, WISCONSIN

REV	DATE	BY	DESCRIPTION

DESIGNED: DEM
DRAWN: DEM
CHECKED: REO
APPROVED: CLM

PROJECT NUMBER
XXXXXXX

SHEET REFERENCE NO.
3.0

Q:\Dept of Public Works\Engineering Department\2000 - Municipal Projects\Pheasant Run - Riverside Dr Easements\10 - DWG\SHEETS\3.0_PHEASANT RUN GRADING PLAN.dwg, 2/23/2022 9:34:06 AM, KRIS LYONS, _Little Chute-C3D-2018.ctb

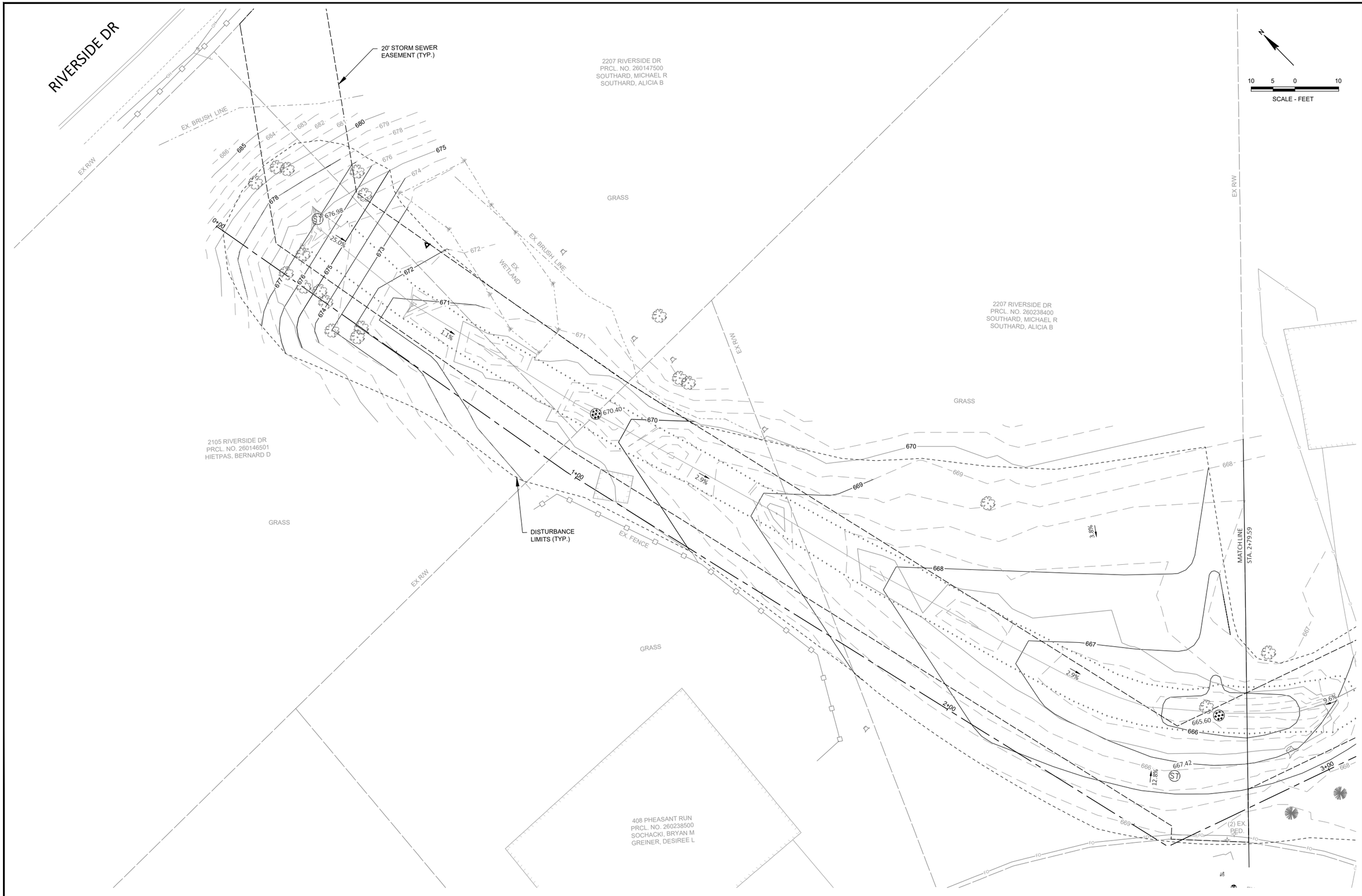

Little Chute
ESTABLISHED 1848

ENGINEERING DEPARTMENT
108 WEST MAIN STREET
LITTLE CHUTE, WISCONSIN 54140

PHEASANT RUN STORM SEWER
GRADING PLAN
STA. 0+00 TO STA. 3+00
VILLAGE OF LITTLE CHUTE, WISCONSIN

REV	DATE	BY	DESCRIPTION

DESIGNED: DEM
DRAWN: DEM
CHECKED: REO
APPROVED: CLM

PROJECT NUMBER
XXXXXXX

SHEET REFERENCE NO.
3.1

Q:\Dept of Public Works\Engineering Department\2000 - Municipal Projects\Pheasant Run - Riverside Dr Easements\10 - DWG\SHEETS\3.1-3.2_PHEASANT RUN GRADING PLAN ZOOM IN.dwg, 2/23/2022 9:34:24 AM, KRIS LYONS, , Little Chute-C3D-2018.ctb

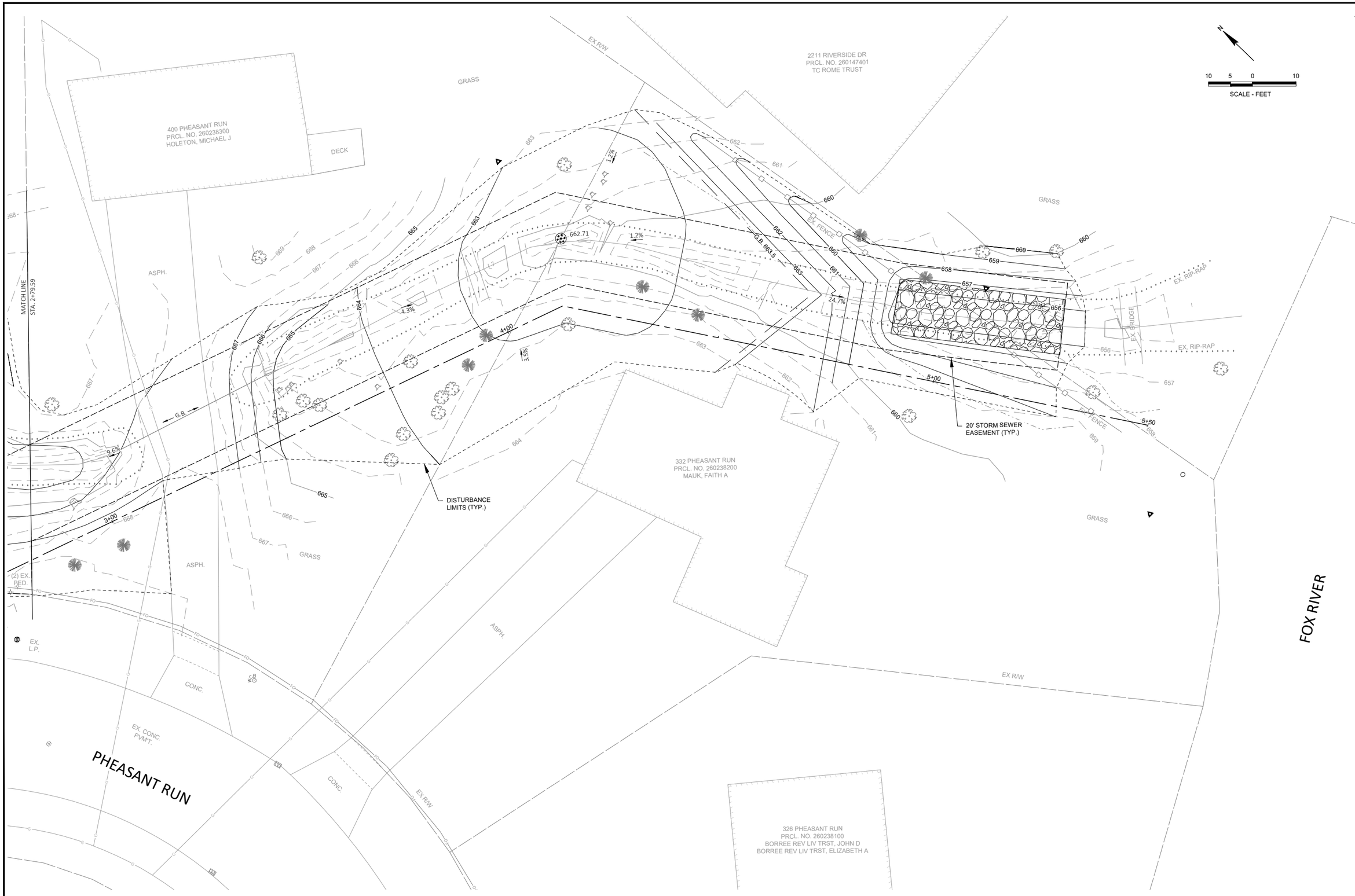

Q:\Dept of Public Works\Engineering Department\2000 - Municipal Projects\Pheasant Run - Riverside Dr Easements\10 - DWG\SHEETS\3.1-3.2_PHEASANT RUN GRADING PLAN ZOOM IN.dwg; 2/23/2022 9:34:28 AM; KRIS LYONS; _Little Chute-C3D-2018.ctb

Little Chute
ESTABLISHED 1848

ENGINEERING DEPARTMENT
108 WEST MAIN STREET
LITTLE CHUTE, WISCONSIN 54140

PHEASANT RUN STORM SEWER
GRADING PLAN
STA. 3+00 TO STA. 5+50
VILLAGE OF LITTLE CHUTE, WISCONSIN

REV	DATE	BY	DESCRIPTION

DESIGNED: DEM
DRAWN: DEM
CHECKED: REO
APPROVED: CLM

PROJECT NUMBER
XXXXXXX

SHEET REFERENCE NO.
3.2

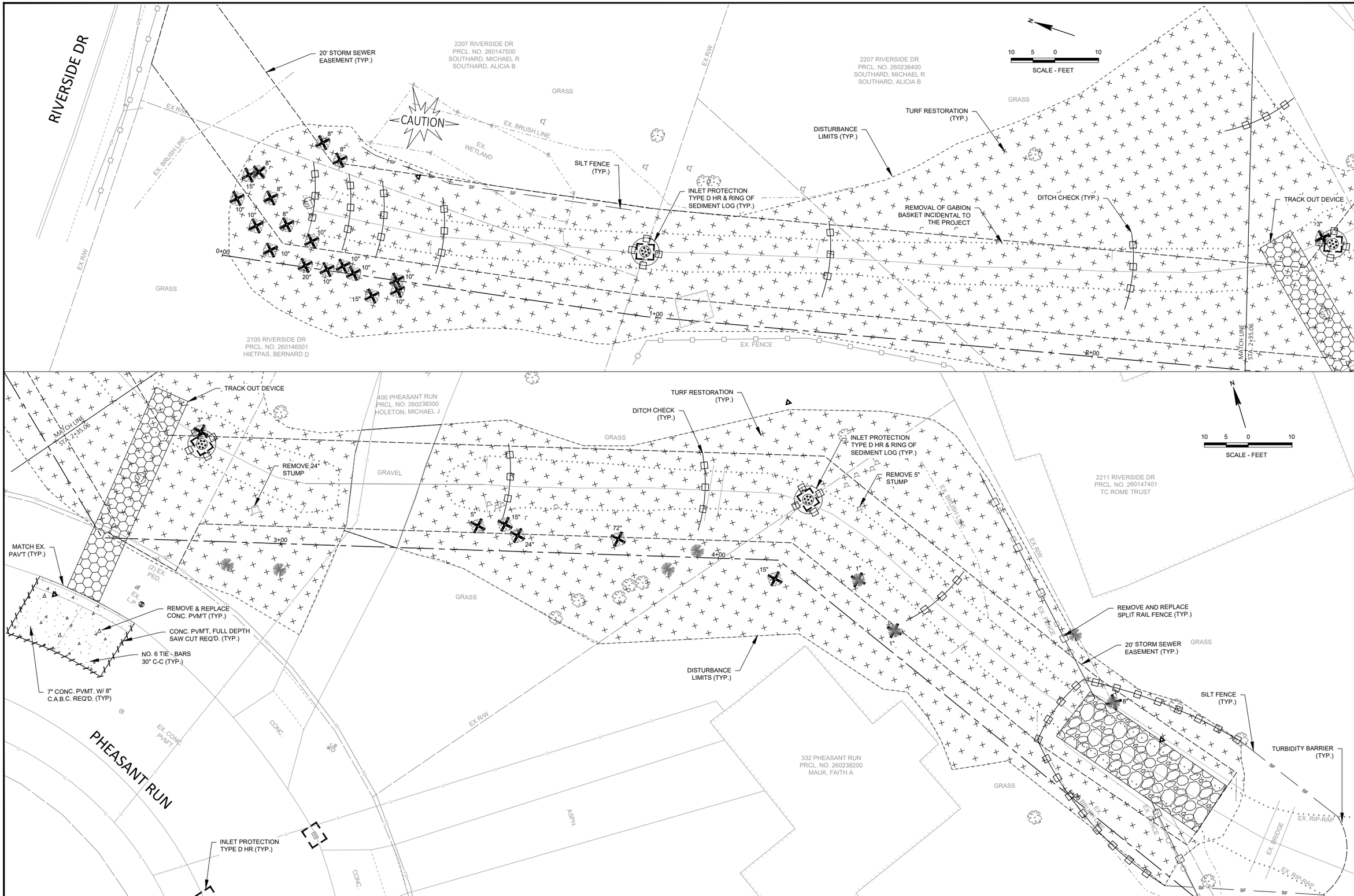

Q:\Dept of Public Works\Engineering Department\2000 - Municipal Projects\Pheasant Run - Riverside Dr Easements\10 - DWG\SHEETS\4.0_PHEASANT RUN EC, PAVING, TREE REMOVAL.dwg, 2/23/2022 9:34:44 AM, KRIS LYONS, _Little Chute-C3D-2018.ctb

Little Chute
ESTABLISHED 1848

ENGINEERING DEPARTMENT
108 WEST MAIN STREET
LITTLE CHUTE, WISCONSIN 54140

PHEASANT RUN STORM SEWER EROSION CONTROL, DEMOLITION, AND PAVING STA. 0+00 TO STA. 5+50 VILLAGE OF LITTLE CHUTE, WISCONSIN

REV	DATE	BY	DESCRIPTION

DESIGNED: DEM
DRAWN: DEM
CHECKED: REO
APPROVED: CLM

PROJECT NUMBER
XXXXXXX

SHEET REFERENCE NO.
4.0

SEQUENCE OF CONSTRUCTION

THE CONTRACTOR SHALL COMPLY WITH THE FOLLOWING SEQUENCE AND SCHEDULE OF MAJOR LAND DISTURBING ACTIVITIES:

A. POST PERMITS AT SITE. NOTIFY VILLAGE OF LITTLE CHUTE AND ENGINEER AT LEAST 5 DAYS PRIOR TO THE START OF UTILITY CONSTRUCTION (PHASE 1).

B. INSTALL INLET PROTECTION BEFORE BEGINNING ANY LAND DISTURBING CONSTRUCTION ACTIVITIES. INSTALL TRACK-OUT CONTROL PRACTICE, IF NEEDED. STREET SWEEPING SHALL BE PERFORMED ON A DAILY BASIS OR AS NEEDED.

C. SAW CUT AND REMOVE PAVEMENT AS NEEDED FOR UTILITY REPLACEMENT. INSTALL SANITARY SEWER, STORM SEWER, AND WATER MAIN. INSTALL INLET PROTECTION FOR NEW STORM INLETS IMMEDIATELY AFTER THE STORM INLET IS INSTALLED. DE-WATER TRENCHES AS NEEDED. EXCESS EXCAVATED MATERIAL SHALL BE LOADED ON TRUCKS AND HAULED TO AN OFFSITE LOCATION SELECTED BY THE CONTRACTOR. THE CONTRACTOR IS RESPONSIBLE FOR PERMITS AND BEST MANAGEMENT PRACTICES AT THE OFFSITE LOCATION. TEMPORARILY STABILIZE DISTURBED AREAS LOCATED IN EXISTING PAVEMENT AREAS WITH A GRAVEL/PAVEMENT SURFACE, SUCH THAT NO MORE THAN 200 LINEAR FEET OF UTILITY TRENCH LENGTH IN EXISTING PAVEMENT AREAS IS EXPOSED SOIL AT THE END OF EACH DAY.

D. THE UTILITY CONTRACTOR IS RESPONSIBLE FOR TEMPORARY STABILIZATION PRACTICES AND INSTALLING, REPAIRING, MAINTAINING, AND INSPECTING EROSION AND SEDIMENT CONTROLS UNTIL THE STREET CONTRACTOR BEGINS WORK ALONG EACH STREET SEGMENT.

E. POST PERMITS AT SITE. NOTIFY VILLAGE OF LITTLE CHUTE AND ENGINEER AT LEAST 5 DAYS PRIOR TO THE START OF STREET CONSTRUCTION (PHASE 2).

F. MAINTAIN EROSION AND SEDIMENT CONTROL PRACTICES PREVIOUSLY INSTALLED BY THE UTILITY CONTRACTOR (PHASE 1).

G. EXCAVATE THE STREET. EXCESS EXCAVATED MATERIAL SHALL BE LOADED ON TRUCKS AND HAULED TO AN OFFSITE LOCATION SELECTED BY THE CONTRACTOR. THE CONTRACTOR IS RESPONSIBLE FOR PERMITS AND BEST MANAGEMENT PRACTICES AT THE OFFSITE LOCATION. IN NEW PAVEMENT AREAS, STABILIZE EXPOSED SOIL WITH GRAVEL BASE. NO MORE THAN 200 LINEAR FEET OF STREET SUB-GRADE SHALL BE EXPOSED SOIL AT THE END OF EACH DAY, INCLUDING DRIVEWAYS LOCATED ALONG THE 200 LINEAR FEET STREET LENGTH.

H. INSTALL CONCRETE AND ASPHALT PAVEMENTS. PLACE TOPSOIL IN LAWN AREAS. STABILIZE LAWN AREAS WITHIN 14 DAYS OF TOPSOIL PLACEMENT. RESTORE LAWN AREAS WITH TOPSOIL, LAWN SEED, FERTILIZER AND MULCH.

A 5.0 CONSTRUCTION SITE SEQUENCING

NOT TO SCALE

WDNR - CONSERVATION PRACTICE STANDARD - TRACKOUT CONTROL PRACTICES:

CONTRACTOR SHALL PROVIDE THE STONE TRACKING PAD IN ACCORDANCE WITH THE WISCONSIN DEPARTMENT OF NATURAL RESOURCES CONSERVATION STANDARD No. 1057.

TRACKING PAD SHALL BE INSTALLED PRIOR TO ANY TRAFFIC LEAVING THE SITE. IF CONDITIONS ARE SUCH THAT SEDIMENT IS NOT REMOVED FROM TIRES BY THE TRACKING PAD, THEN TIRES SHALL BE WASHED IN ACCORDANCE WITH WDNR TECHNICAL STANDARD No. 1057.

INSTALL THE TRACKING PAD ACROSS THE FULL WIDTH OF THE ACCESS POINT, OR RESTRICT EXITING TRAFFIC TO A DEDICATED EGRESS LANE WITH A DRIVING SURFACE AT LEAST 12 FEET WIDE.

ENSURE THE TRACKING PAD IS AT LEAST 50 FEET LONG. IF A 50-FOOT PAD LENGTH IS NOT POSSIBLE DUE TO SITE CONSTRAINTS, INSTALL THE MAXIMUM LENGTH PRACTICABLE AND SUPPLEMENT WITH ADDITIONAL PRACTICES AS NEEDED TO PREVENT OR REDUCE TRACKOUT.

WHERE WARRANTED DUE TO SOIL TYPE OR HIGH GROUNDWATER, UNDERLAY THE STONE TRACKING PAD WITH GEOTEXTILE FABRIC TO MINIMIZE MIGRATION OF UNDERLYING SOIL INTO THE STONE. SELECT FABRIC TYPE BASED ON SOIL CONDITIONS AND VEHICLE LOADING.

PLACE THE AGGREGATE IN A LAYER AT LEAST 12 INCHES THICK.

DIVERT SURFACE FLOWS AWAY FROM TRACKING PADS OR CONVEY FLOW UNDER AND/OR AROUND USING CULVERTS AND SWALES. DIRECT RUNOFF FROM TRACKING PADS TO SEDIMENT CONTROL PRACTICES.

DO NOT COMPACT AGGREGATE PRIOR TO USE. COMPACTION, GROUTING, OR OTHER MEANS OF CREATING A SMOOTH SURFACE COMPROMISE THE EFFECTIVENESS OF THE TRACKING PAD.

REMOVE STONES LODGED BETWEEN THE TIRES OF DUAL WHEEL VEHICLES PRIOR TO LEAVING THE CONSTRUCTION SITE.

MONITOR TRACKING PADS FOR COMPACTION, SOIL DEPOSITS, AND MIXING OF UNDERLYING SOILS AND STONE LAYERS.

MAINTAIN A LOOSENED, ROUGH SURFACE BY SCRAPING, LOOSENING, OR TOP-DRESSING WITH ADDITIONAL AGGREGATE.

REPLACE GEOTEXTILE AND STONE IF LESS-INTENSIVE MAINTENANCE EFFORTS FAIL TO RE-ESTABLISH EFFECTIVENESS.

ADD STONE AS NEEDED TO MAINTAIN THE MINIMUM PAD THICKNESS.

REPLACE DAMAGED OR CRUSHED CULVERTS UNDER TRACKING PAD.

① USE HARD, DURABLE, ANGULAR STONE OR RECYCLED CONCRETE MEETING THE GRADATION IN TABLE 1. WHERE THIS GRADATION IS NOT AVAILABLE, MEET THE GRADATION IN WISCONSIN DEPARTMENT OF TRANSPORTATION (DOT) 2018 STANDARD SPECIFICATION, SECTION 312, SELECT CRUSHED MATERIAL.

② SLOPE THE STONE TRACKING PAD IN A MANNER TO DIRECT RUNOFF TO AN APPROVED TREATMENT PRACTICE.

③ SELECT FABRIC TYPE BASED ON SOIL CONDITIONS AND VEHICLES LOADING.

④ INSTALL TRACKING PAD ACROSS FULL WIDTH OF THE ACCESS POINT, OR RESTRICT EXISTING TRAFFIC TO A DEDICATED EGRESS LANE AT LEAST 12 FEET WIDE ACROSS THE TOP OF THE PAD.

⑤ IF A 50' PAD LENGTH IS NOT POSSIBLE DUE TO SITE GEOMETRY, INSTALL THE MAXIMUM LENGTH PRACTICABLE AND SUPPLEMENT WITH ADDITIONAL PRACTICES AS NEEDED.

⑥ SWEEP SEDIMENT FROM ROAD SURFACE DAILY OR UPON TRACKING OF MATERIAL ONTO ANY PAVED SURFACES TO PREVENT ANY MATERIAL FROM LEAVING THE WORKING AREA.

TABLE 1
GRADATION FOR STONE TRACKING PADS

SIEVE SIZE	PERCENT BY WEIGHT PASSING
3"	100
2-1/2"	90-100
1-1/2"	25-60
3/4"	0-20
3/8"	0-5

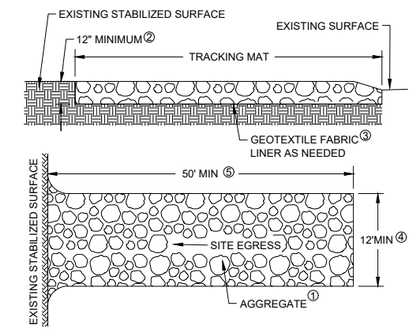

B 5.0 TRACKOUT CONTROL

NOT TO SCALE

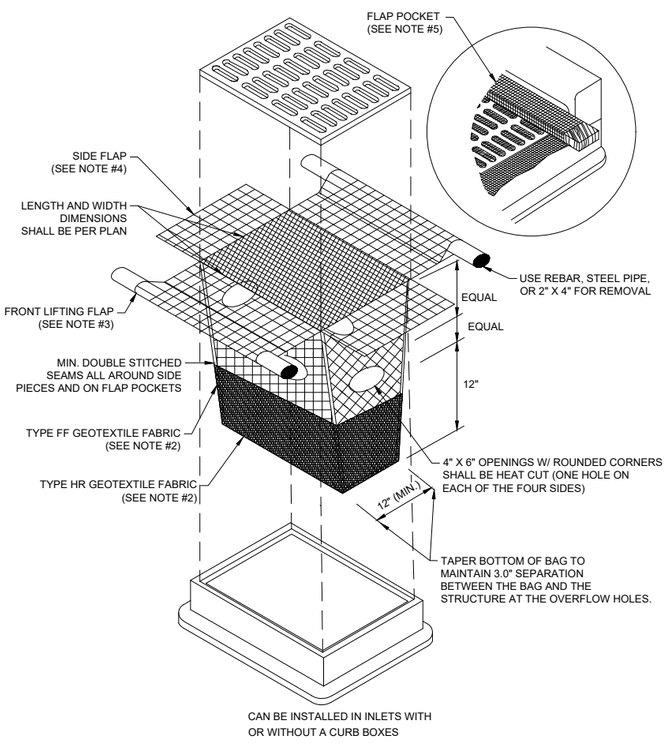

GENERAL NOTES

1. TAPER BOTTOM OF BAG TO MAINTAIN THREE INCHES OF CLEARANCE BETWEEN THE BAG AND THE STRUCTURE, MEASURED FROM THE BOTTOM OF THE OVERFLOW OPENING TO THE STRUCTURE WALL.
2. GEOTEXTILE FABRIC TYPE FF FOR FLAPS, TOP HALF OF FILTER BAG. GEOTEXTILE FABRIC, TYPE HR FOR BOTTOM HALF OF FILTER BAG WITH FRONT, BACK, AND BOTTOM BEING ONE PIECE.
3. FRONT LIFTING FLAP IS TO BE USED WHEN REMOVING AND MAINTAINING FILTER BAG.
4. SIDE FLAPS SHALL BE A MAXIMUM OF TWO INCHES LONG. FOLD THE FABRIC OVER AND REINFORCE WITH MULTIPLE STITCHES.
5. FLAP POCKETS SHALL BE LARGE ENOUGH TO ACCEPT WOOD 2"x4". THE REBAR, STEEL PIPE, OR WOOD SHALL BE INSTALLED IN THE REAR FLAP AND SHALL NOT BLOCK THE TOP HALF OF THE CURB FACE OPENING.

INSTALLATION NOTES

(TYPE D) DO NOT INSTALL INLET PROTECTION TYPE D IN INLETS SHALLOWER THAN 30", MEASURED FROM THE BOTTOM OF THE INLET TO THE TOP OF THE GRATE.

TRIM EXCESS FABRIC IN THE FLOW LINE TO WITHIN 3" OF THE GRATE.

THE INSTALLED BAG SHALL HAVE A MINIMUM SIDE CLEARANCE, BETWEEN THE INLET WALLS AND THE BAG, MEASURED AT THE BOTTOM OF THE OVERFLOW HOLES, OF 3". WHERE NECESSARY THE CONTRACTOR SHALL CINCH THE BAG, USING PLASTIC ZIP TIES TO ACHIEVE THE 3" CLEARANCE. THE TIES SHALL BE PLACED AT A MAXIMUM OF 4" FROM THE BOTTOM OF THE BAG.

C 5.0 INLET PROTECTION TYPE D-HR

NOT TO SCALE

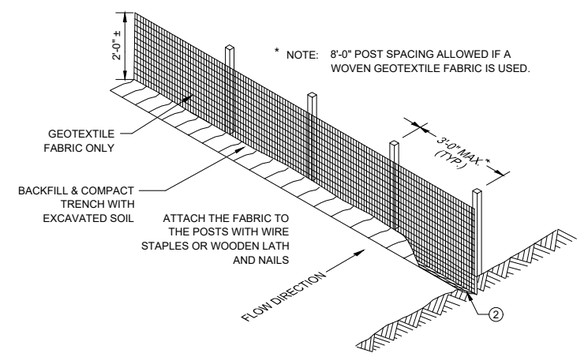

SILT FENCE

THIS DRAWING BASED ON WISCONSIN DEPARTMENT OF TRANSPORTATION STANDARD DETAIL DRAWING 8 E 9-6.

JOINING TWO LENGTHS OF SILT FENCE ⑤

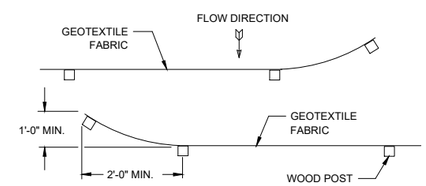

HOOK METHOD

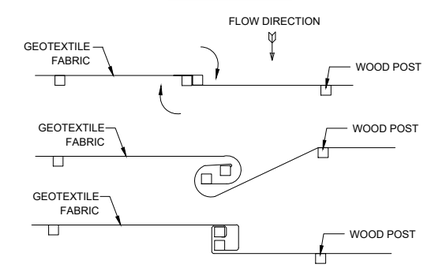

TWIST METHOD

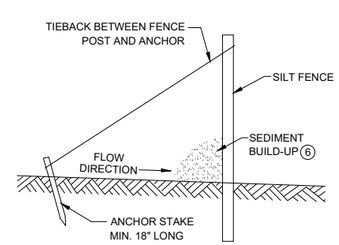

SILT FENCE TIE BACK

(WHEN ADDITIONAL SUPPORT REQUIRED)

GENERAL NOTES

① HORIZONTAL BRACE REQUIRED WITH 2" X 4" WOODEN FRAME OR EQUIVALENT AT TOP OF POSTS.

② TRENCH SHALL BE A MINIMUM OF 4" WIDE & 6" DEEP TO BURY AND ANCHOR THE GEOTEXTILE FABRIC. FOLD MATERIAL TO FIT TRENCH AND BACKFILL & COMPACT TRENCH WITH EXCAVATED SOIL.

③ WOOD POSTS SHALL BE A MINIMUM SIZE OF 1-1/8" X 1-1/8" OF OAK OR HICKORY.

④ SILT FENCE TO EXTEND ACROSS THE TOP OF THE PIPE.

⑤ CONSTRUCT SILT FENCE FROM A CONTINUOUS ROLL IF POSSIBLE BY CUTTING LENGTHS TO AVOID JOINTS. IF A JOINT IS NECESSARY USE ONE OF THE FOLLOWING TWO METHODS:
A) TWIST METHOD -- OVERLAP THE END POSTS AND TWIST, OR ROTATE, AT LEAST 180 DEGREES;
B) HOOK METHOD -- HOOK THE END OF EACH SILT FENCE LENGTH.

⑥ REMOVE SEDIMENT BEHIND SILT FENCE WHEN REACHING 1/2 THE HEIGHT.

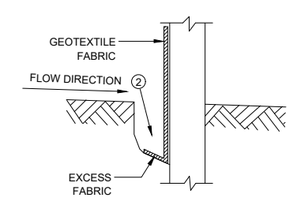

TRENCH DETAIL

D 5.0 SILT FENCING DETAILS

NOT TO SCALE

Little Chute ESTABLISHED 1848
ENGINEERING DEPARTMENT
108 WEST MAIN STREET
LITTLE CHUTE, WISCONSIN 54140

PHEASANT RUN STORM SEWER
PHEASANT RUN
MISCELLANEOUS CONSTRUCTION DETAILS
VILLAGE OF LITTLE CHUTE, WISCONSIN

REV	DATE	BY	DESCRIPTION

DESIGNED:
DRAWN: DEM
CHECKED: REO
APPROVED: CLM

PROJECT NUMBER
XXXXX

SHEET REFERENCE NO.
5.0

Q:\Dept of Public Works\Engineering Department\2000 - Municipal Projects\Pheasant Run - Riverside Dr Easements\10 - DWG\SHEETS\5.0_DETAILS.dwg, 2/23/2022 9:35:02 AM, KRIS LYONS, _Little Chute-C3D-2018.ctb

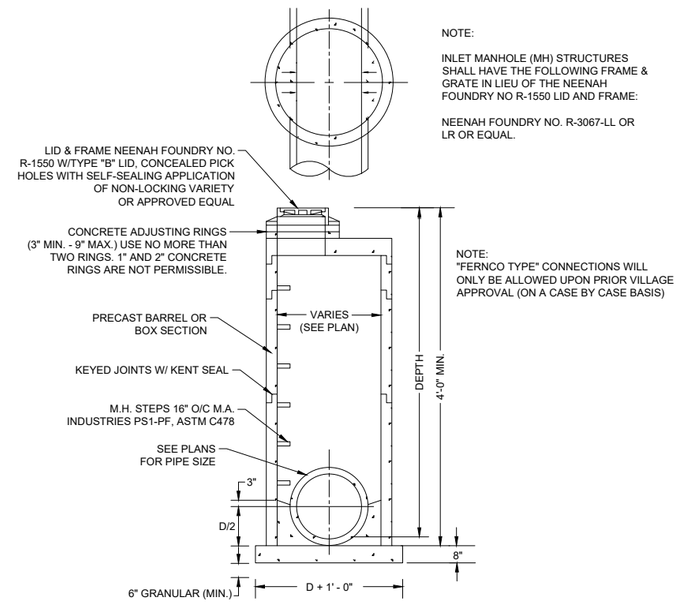

A 5.1 STORM SEWER MANHOLE DETAIL
NOT TO SCALE

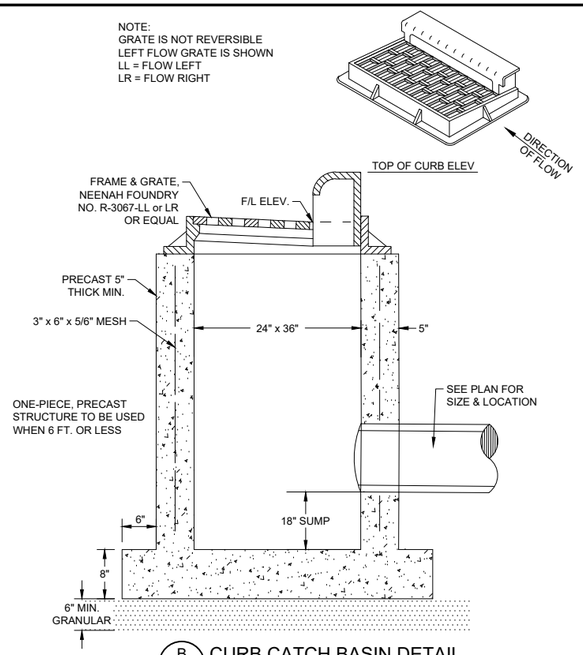

B 5.1 CURB CATCH BASIN DETAIL
NOT TO SCALE

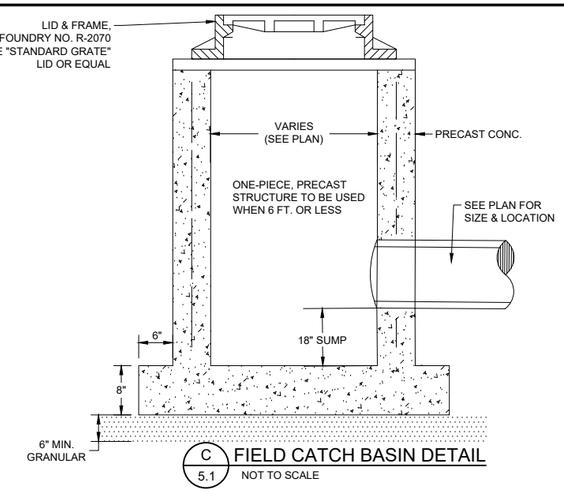

C 5.1 FIELD CATCH BASIN DETAIL
NOT TO SCALE

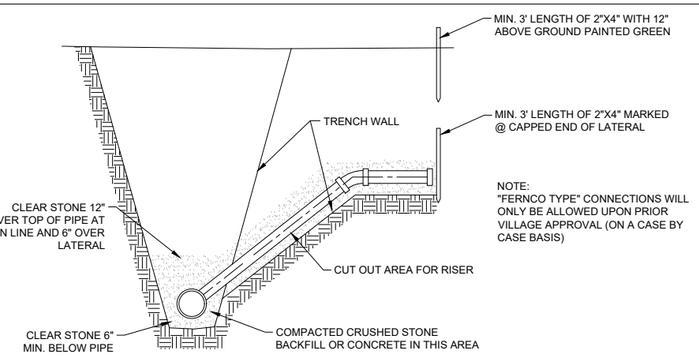

D 5.1 SANITARY LATERAL RISER DETAIL
NOT TO SCALE

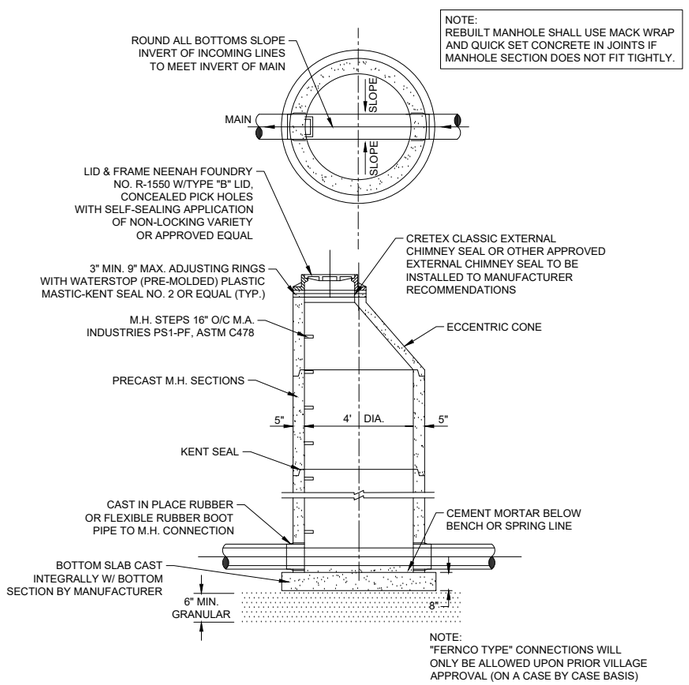

E 5.1 STANDARD PRECAST SANITARY MANHOLE DETAIL
NOT TO SCALE

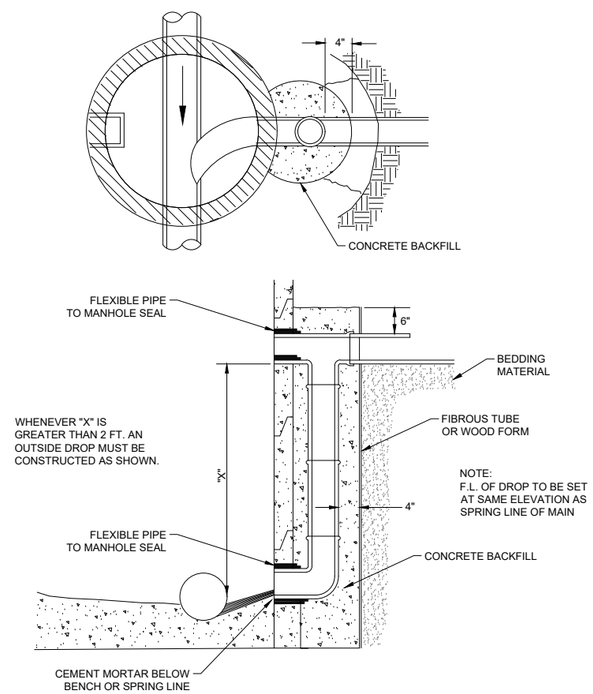

F 5.1 OUTSIDE DROP PRECAST MANHOLE
NOT TO SCALE

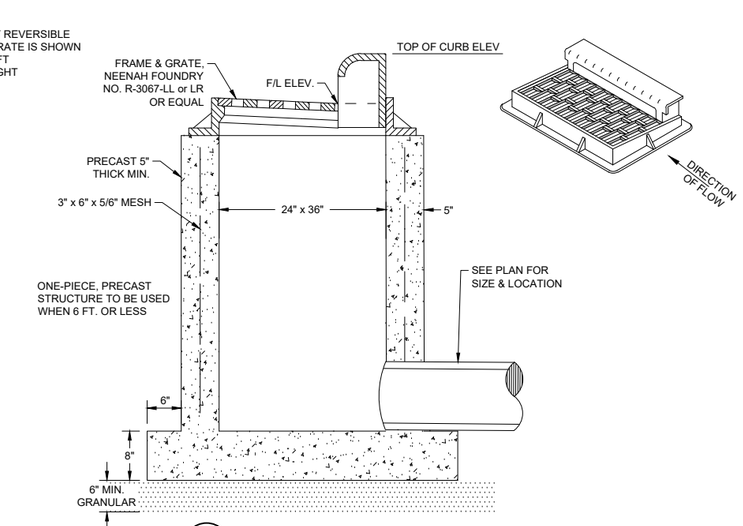

G 5.1 CURB INLET DETAIL
NOT TO SCALE

Little Chute ESTABLISHED 1848

ENGINEERING DEPARTMENT
108 WEST MAIN STREET
LITTLE CHUTE, WISCONSIN 54140

PHEASANT RUN STORM SEWER
PHEASANT RUN
MISCELLANEOUS CONSTRUCTION DETAILS
VILLAGE OF LITTLE CHUTE, WISCONSIN

REV	DATE	BY	DESCRIPTION

DESIGNED:
DRAWN: DEM
CHECKED: REO
APPROVED: CLM

PROJECT NUMBER
XXXXXX
SHEET REFERENCE NO.
5.1

Q:\Dept of Public Works\Engineering Department\2000 - Municipal Projects\Pheasant Run - Riverside Dr Easements\10- DWG\SHEETS\5.0_DETAILS.dwg; 2/23/2022 9:35:15 AM; KRIS LYONS; _Little Chute-C3D-2018.ctb

MINIMUM RESTRAINT LENGTH (FT) ON BOTH SIDES OF THE FITTING				
FITTING TYPE/NOMINAL SIZE	6"	8"	12"	16"
11 1/4° BEND	2	2	3	3
22 1/2° BEND	3	3	5	6
45° BEND	5	6	9	11
90° BEND	11	15	21	27
DEAD END	30	40	56	73
TOP SIDE OF A VERTICAL OFFSET	13	17	24	31
TEE RUN X BRANCH 6"BY	14			
TEE RUN X BRANCH 8"BY	10	24		
TEE RUN X BRANCH 12"BY	1	15	40	
TEE RUN X BRANCH 16"BY	1	7	33	56

NOTES:

1. DIMENSIONS IN TABLE ARE BASED ON A WATER PRESSURE OF 150 P.S.I AND ON AN EARTH RESISTANCE OF 2 TONS PER SQUARE FOOT.

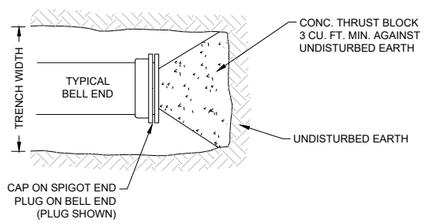

PLAN

A 5.2 BLOCKING FOR PLUGS
NOT TO SCALE

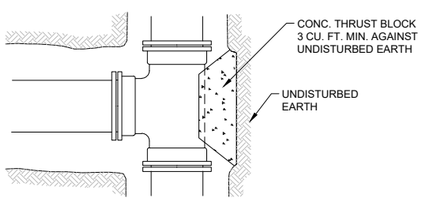

PLAN

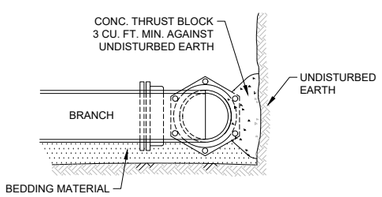

SECTION A-A

E 5.2 BLOCKING FOR TEES
NOT TO SCALE

GENERAL NOTE

1. GATE VALVE ADAPTOR TO BE MADE OUT OF 1/4" STEEL, WITH UV POLYURETHANE PROTECTIVE COATING, AND HAVE 3/4" RUBBER GASKET ATTACHED TO THE GATE VALVE ADAPTOR.

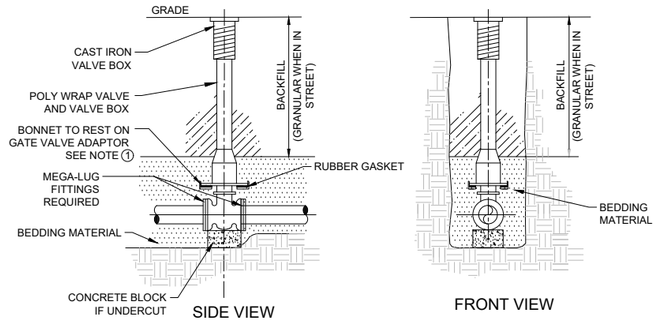

B 5.2 STANDARD VALVE & VALVE BOX SETTING
NOT TO SCALE

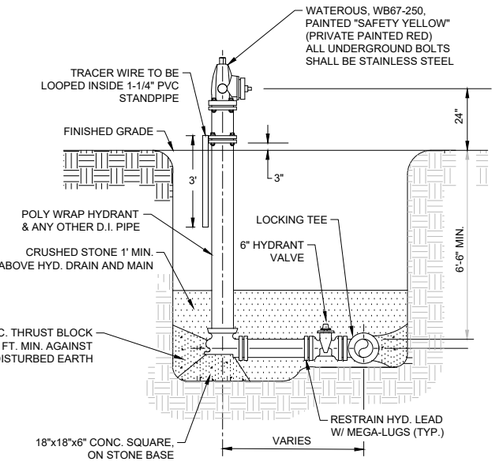

C 5.2 HYDRANT DETAIL
NOT TO SCALE

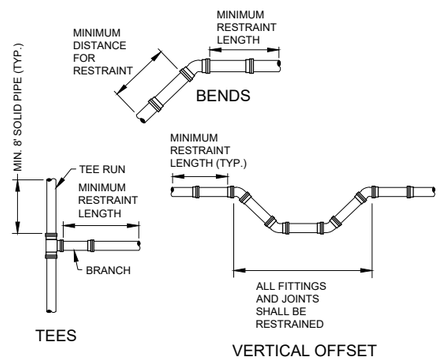

D 5.2 WATER MAIN RESTRAINT DETAIL
NOT TO SCALE

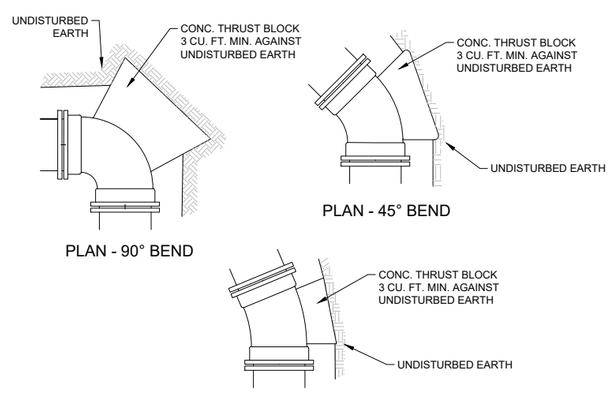

F 5.2 BLOCKING FOR WATER MAIN BENDS
NOT TO SCALE

NOTE: "FERNCO TYPE" CONNECTIONS WILL ONLY BE ALLOWED UPON PRIOR VILLAGE APPROVAL (ON A CASE BY CASE BASIS). TYPICAL CONNECTIONS FOR SANITARY AND STORM SEWER AT THE MAIN SHALL USE KOR-N-TEE OR APPROVED EQUAL.

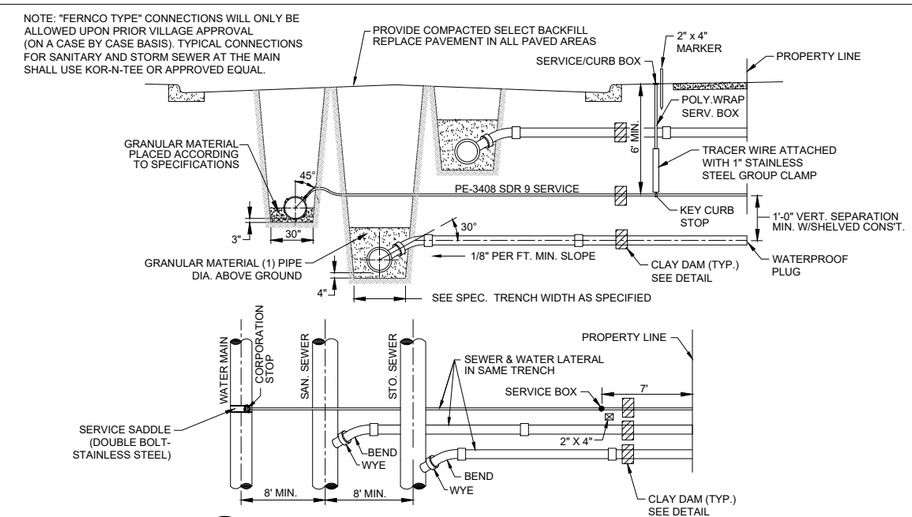

G 5.2 TYPICAL CONNECTION SEWER & WATER
NOT TO SCALE

NOTES:
CONTRACTOR SHALL BACKFILL AND COMPACT TRENCH WITH CLAY DAM. NO STONE SHALL BE USED IN THE BOTTOM OF TRENCH ALONG THE LENGTH OF THE DAM.

* NOTE:
CLAY DAM SHALL BE INSTALLED IN THE GREEN SPACE LOCATED WITHIN THE PUBLIC RIGHT-OF-WAY WHEN CONDITIONS ALLOW. THE ENGINEER MAY MODIFY THE LOCATION TO FIT SITE CONDITIONS.

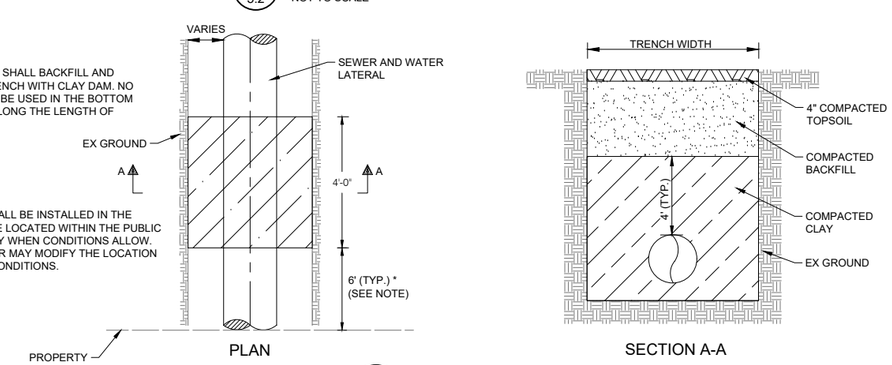

H 5.2 CLAY DAM
NOT TO SCALE

Little Chute ESTABLISHED 1848
ENGINEERING DEPARTMENT
108 WEST MAIN STREET
LITTLE CHUTE, WISCONSIN 54140

PHEASANT RUN STORM SEWER
PHEASANT RUN
MISCELLANEOUS CONSTRUCTION DETAILS
VILLAGE OF LITTLE CHUTE, WISCONSIN

REV	DATE	BY	DESCRIPTION

DESIGNED:
DRAWN: DEM
CHECKED: REO
APPROVED: CLM

PROJECT NUMBER
XXXXXX
SHEET REFERENCE NO.
5.2

Q:\Dept of Public Works\Engineering Department\2000 - Municipal Projects\Pheasant Run - Riverside Dr Easements\10 - DWGS\SHEETS\5.0_DETAILS.dwg, 2/23/2022 9:35:25 AM, KRIS LYONS, _Little Chute-C3D-2018.ctb

GENERAL NOTES

THE EXACT NUMBER, LOCATION AND SPACING OF ALL SIGNS AND BARRICADES SHALL BE ADJUSTED TO FIT FIELD CONDITIONS AS APPROVED BY THE ENGINEER.

ANY SIGNS TEMPORARY OR EXISTING, WHICH CONFLICT WITH TRAFFIC CONTROL "IN USE" SHALL BE REMOVED OR COVERED AS NEEDED AND AS APPROVED BY THE ENGINEER.

THE SPACING BETWEEN TRAFFIC CONTROL SIGNS SHOULD BE ADJUSTED TO NOT CONFLICT WITH AND SHOULD PROVIDE A DESIRABLE MINIMUM OF 200 FEET CLEARANCE TO EXISTING SIGNS THAT WILL REMAIN IN PLACE.

BARRICADES THAT MUST BE MOVED FOR A WORK OPERATION SHALL BE IMMEDIATELY RE-ESTABLISHED UPON COMPLETION OF THE OPERATION OR, FOR CONTINUING OPERATIONS, AT THE END OF EACH WORKING DAY.

SIGNS THAT WILL BE IN PLACE LESS THAN 7 CONTINUOUS DAYS AND NIGHTS MAY BE MOUNTED ON PORTABLE SUPPORTS.

ALL TYPE III BARRICADES SHALL HAVE RAILS REFLECTORIZED ON BOTH FACES. STRIPES SHALL BE PROPERLY SLOPED DOWN THE TRAFFIC SIDE OR AS SHOWN IN THE ROAD CLOSURE BARRICADE DETAIL "D" FOR FULL ROAD CLOSURES.

TYPE "A" LOW-INTENSITY FLASHING WARNING LIGHTS SHALL BE VISIBLE ON BOTH SIDES OF THE BARRICADE.

THE R11-2 AND R11-4 SIGNS PLACED ON BARRICADES SHALL COVER NO MORE THAN THE TOP RAIL. THE SIGNS SHALL NOT COVER ANY PORTION OF THE MIDDLE OR BOTTOM RAILS.

"WO" SIGNS ARE THE SAME AS "W" SIGNS EXCEPT THE BACKGROUND IS ORANGE.

ALL SIGNS SHALL BE 48" X 48" UNLESS OTHERWISE NOTED BELOW:
R11-2 SHALL BE 48" X 30"
R11-4 SHALL BE 60" X 30"

1. TWO WARNING LIGHTS SHALL BE PROVIDE ON THE CENTER BARRICADE AND A MINIMUM OF ONE WARNING LIGHT SHALL BE PROVIDED ON EACH OF THE OTHER BARRICADES WITHIN THE ROADWAY LIMITS. SPACING OF THE WARING LIGHTS SHALL BE UNIFORM TO THE EDGE OF THE ROADWAY AS SHOWN (APPOX. 8-FOOT LIGHT SPACING)
2. THESE SIGNS AND BARRICADES ARE NOT REQUIRED IF ROAD CLOSURES BEGIN AT INTERSECTIONS.
3. FOR ROAD CLOSURE WITHOUT LOCAL ACCESS TO PROJECT, SEE ROAD CLOSURE BARRICADE "DETAIL D".
4. FOR ROAD CLOSURE WITH LOCAL ACCESS TO PROJECT. SEE LANE CLOSURE BARRICADE "DETAIL E".
5. FOR BRIDGE OR CULVERT REPLACEMENTS, SUBSTITUTE "BRIDGE OUT" INSTEAD OF "ROAD CLOSED" ON R11-2 AND R11-3 SIGNS.
6. "EAST" CARDINAL DIRECTION MARKERS AND RIGHT TURN ARROWS ARE SHOWN. USE OTHER CARDINAL DIRECTIONS AND ARROWS AS APPROPRIATE.

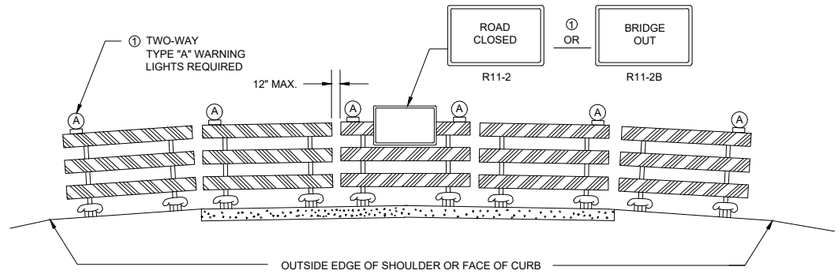

DETAIL D
ROAD CLOSURE BARRICADE DETAIL
APPROACH VIEW

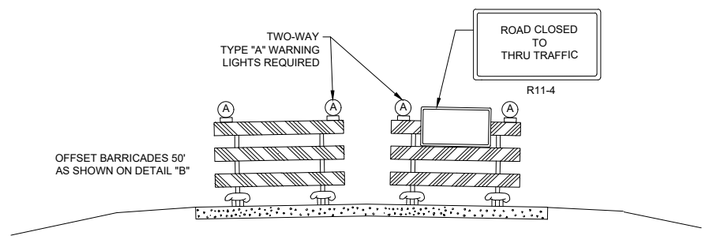

DETAIL E
LANE CLOSURE BARRICADE DETAIL
APPROACH VIEW

A / 5.3 TRAFFIC CONTROL, BARRICADE CLOSURES FOR LANES AND ROADS
NOT TO SCALE

GENERAL NOTES

** IF SIDEWALK ADJACENT TO THE ROADWAY IS PRESENT VERTICAL CLEARANCE SHALL BE MEASURED TO THE SIDEWALK, NOT THE TOP OF CURB AS ILLUSTRATED.

1. OFFSET DISTANCE SHALL BE CONSISTENT WITH EXISTING SIGNS OR CONSISTENT THROUGHOUT LENGTH OF PROJECT
2. THE (±) TOLERANCE FOR MOUNTING HEIGHT IS 3 INCHES
3. SIGN POSTS SHALL BE GREEN NUCOR STEEL MARION RIB-BAK U-CHANNEL SIGN POSTS, 3.0LBS./FT.
4. TYPE II SIGNS SHALL BE FURNISHED AND INSTALLED IN ACCORDANCE WITH THE WIS DOT STANDARD SPECIFICATIONS FOR HIGHWAY AND STRUCTURE CONSTRUCTION AND THE MANUAL ON UNIFORM TRAFFIC CONTROL DEVICES, LATEST EDITIONS.

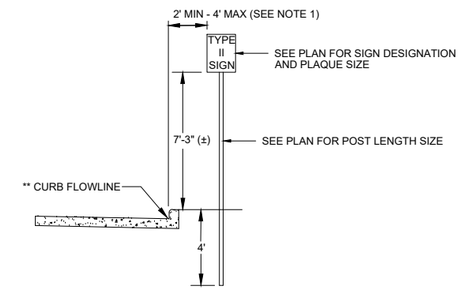

B / 5.3 TYPE II SIGN INSTALLATION
NOT TO SCALE

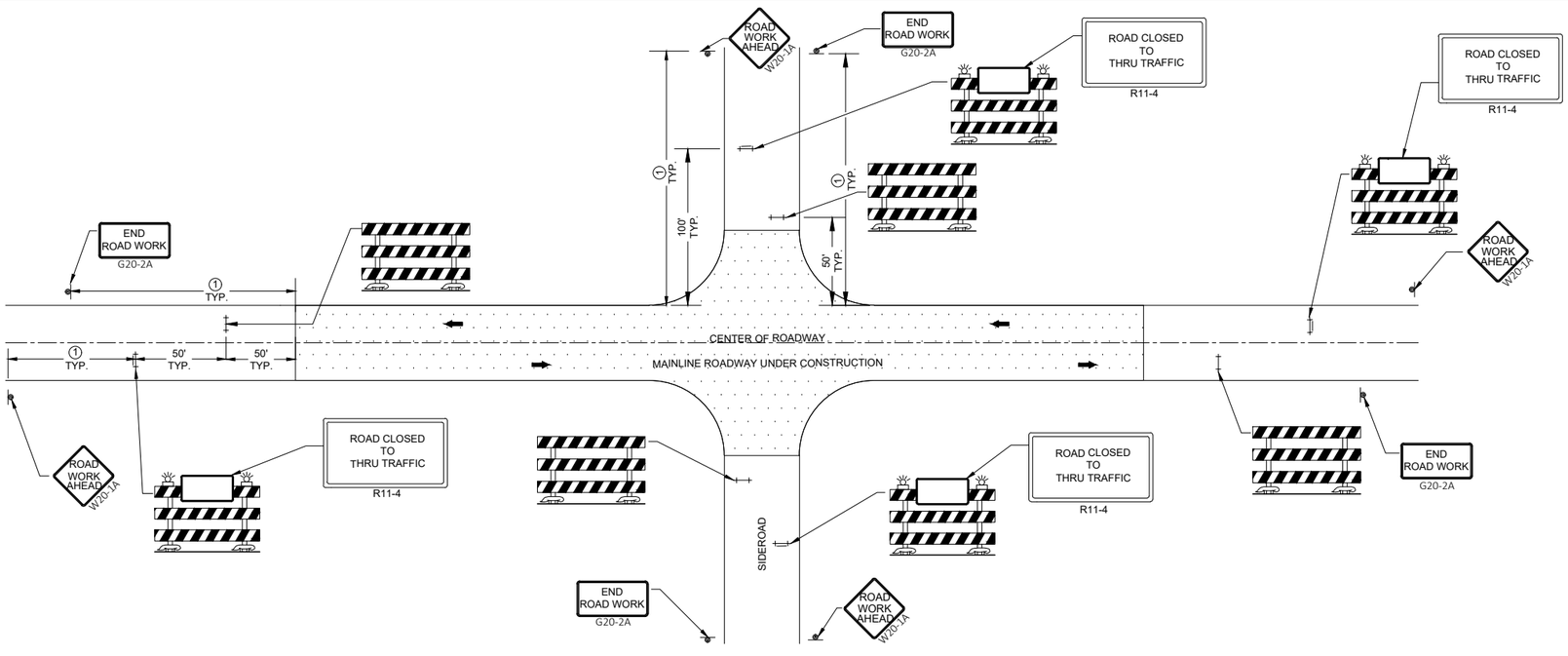

C / 5.3 TRAFFIC CONTROL, MAINLINE AND SIDE ROAD CLOSURE
NOT TO SCALE

GENERAL NOTES

ALL SIGNS SIGNS SHALL BE AS NOTED BELOW:
G20-2A SHALL BE 36" X 18"
R11-4 SHALL BE 60" X 30"
W20-1A SHALL BE 36" X 36"

"WO" SIGN IS THE SAME AS "W" SIGN EXCEPT THE BACKGROUND IS ORANGE

ANY SIGNS TEMPORARY OR EXISTING, WHICH CONFLICT WITH THE TRAFFIC CONTROL "IN USE" SHALL BE REMOVED OR COVERED AS NEEDED AND AS APPROVED BY THE ENGINEER. NO WARNING LIGHTS SHALL BE WORKING ON COVERED OR "DOWNED SIGNS"

THE EXACT NUMBER, LOCATION, AND SPACING OF ALL SIGNS AND DEVICES SHALL BE ADJUSTED TO FIT FIELD CONDITIONS AS DETERMIND BY THE ENGINEER.

SIGN LAYOUTS SHALL BE IN ACCORDANCE WITH THE FHWA'S MANUAL OF STANDARD HIGHWAY SIGNS OR THE WISCONSIN STANDARD SIGN PLATES.

SIGNS THAT WILL REMAIN IN PLACE LESS THAN 7 CONTINUOUS DAYS AND NIGHTS OR THAT WILL BE PLACED IN A CLOSED LANE MAY BE MOUNTED ON PORTABLE SUPPORTS. UNLESS APPROVED BY THE ENGINEER.

BARRICADES IN A CLOSED LANE THAT MUST BE MOVED FOR A WORK OPERATION SHALL BE IMMEDIATELY REESTABLISHED UPON COMPLETION OF THE OPERATION, OR FOR CONTINUING OPERATIONS, AT THE END OF EACH WORKING DAY.

① 350' IF 35 - 40 MPH. / 200' IF 25 - 30 MPH. } OR AT LAST INTERSECTION, WHICHEVER IS CLOSER.

LEGEND

- SIGN ON TEMPORARY OR PERMANENT SUPPORT
- TYPE III BARRICADE
- TYPE III BARRICADE WITH ATTACHED SIGN
- DIRECTION OF TRAFFIC
- WORKING AREA

Little Chute ESTABLISHED 1848
ENGINEERING DEPARTMENT
108 WEST MAIN STREET
LITTLE CHUTE, WISCONSIN 54140

PHEASANT RUN STORM SEWER
PHEASANT RUN
MISCELLANEOUS CONSTRUCTION DETAILS
VILLAGE OF LITTLE CHUTE, WISCONSIN

REV	DATE	BY	DESCRIPTION

DESIGNED:
DRAWN: DEM
CHECKED: REO
APPROVED: CLM

PROJECT NUMBER
XXXXXX
SHEET REFERENCE NO.
5.3

Q:\Dept of Public Works\Engineering Department\2000 - Municipal Projects\Pheasant Run - Riverside Dr Easements\10 - DWG\SHEETS\5.0_DETAILS.dwg; 2/23/2022 9:35:35 AM; KRIS LYONS; _Little Chute-C3D-2018.ctb

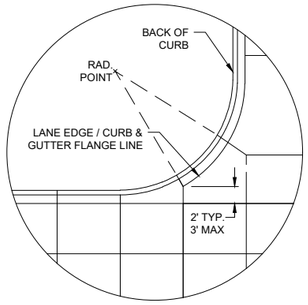

DETAIL "A"

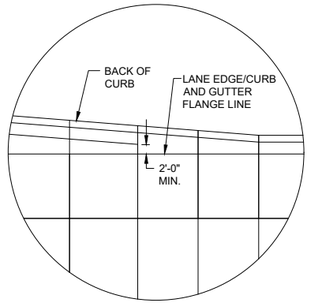

DETAIL "B"

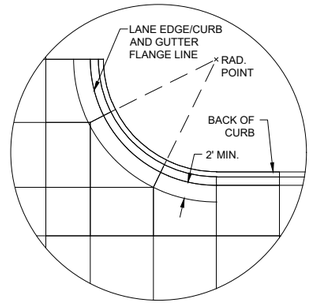

DETAIL "C"

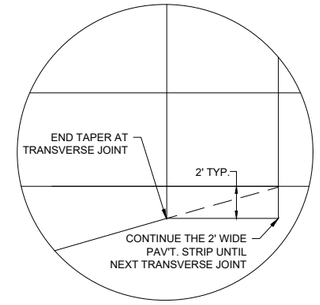

DETAIL "D"

GENERAL NOTES

THE PRIMARY ROADWAY CONTROLS THE TRANSVERSE JOINT PATTERN.

ALIGN NEW JOINTS WITH EXISTING JOINTS OR CRACKS.

CONSTRUCT TRANSVERSE JOINTS PERPENDICULAR TO THE ROADWAY.

ADJUST TRANSVERSE JOINTS TO ALIGN WITH UTILITY FIXTURES (E.G. MANHOLES AND INLETS) IN THE PAVEMENT STRUCTURE WHEN POSSIBLE. WATER VALVES DO NOT REQUIRE JOINT ADJUSTMENT.

AVOID SLABS LESS THAN 2 FEET WIDE OR GREATER THAN 15 FEET WIDE.

SEE TABLE FOR TRANSVERSE JOINT SPACING. JOINT SPACING SPECIFIED IS MAXIMUM AND ACTUAL SPACING CAN BE ADJUSTED TO ACCOMODATE INTERSECTIONS.

AVOID ANGLES LESS THAN 60° BY DOG-LEGGING JOINTS THROUGH CURVE RADIUS POINTS, USE 90° ANGLES WHEN POSSIBLE.

CORRELATE LONGITUDINAL JOINTS WITH LANES WHEN POSSIBLE.

1. PROVIDE TRANSVERSE JOINTS AT ALL PAVEMENT WIDTH CHANGES.
2. CONSTRUCT DOWELED EXPANSION JOINT ON THE SIDE ROAD OF INTERSECTION IF THE SIDE ROAD IS CONCRETE PAVEMENT AND GREATER THAN 300' IN LENGTH, ALIGN EXPANSION JOINT WITH EDGE OF RADIUS.
3. THE ENGINEER MAY APPROVE SLIGHT VARIATIONS FROM THESE JOINTING DETAILS.

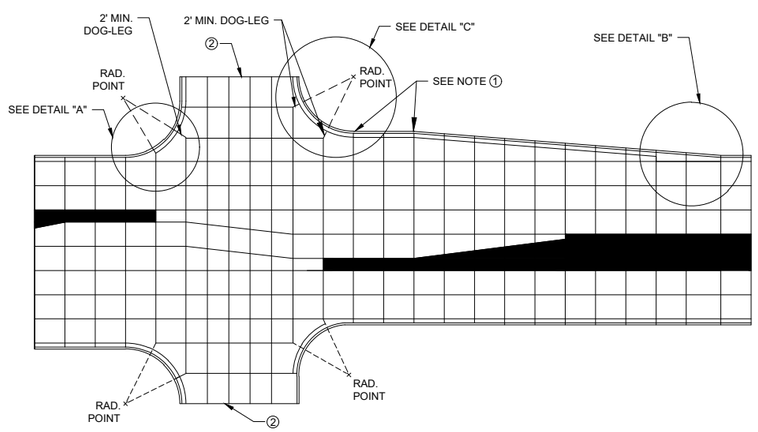

STANDARD INTERSECTION

PAVEMENT DEPTH AND JOINT SPACING TABLE

PAVEMENT DEPTH (D)	CONTRACTION JOINT SPACING
6",6 ½"	12'
7",7 ½"	14'
8" & ABOVE	15'

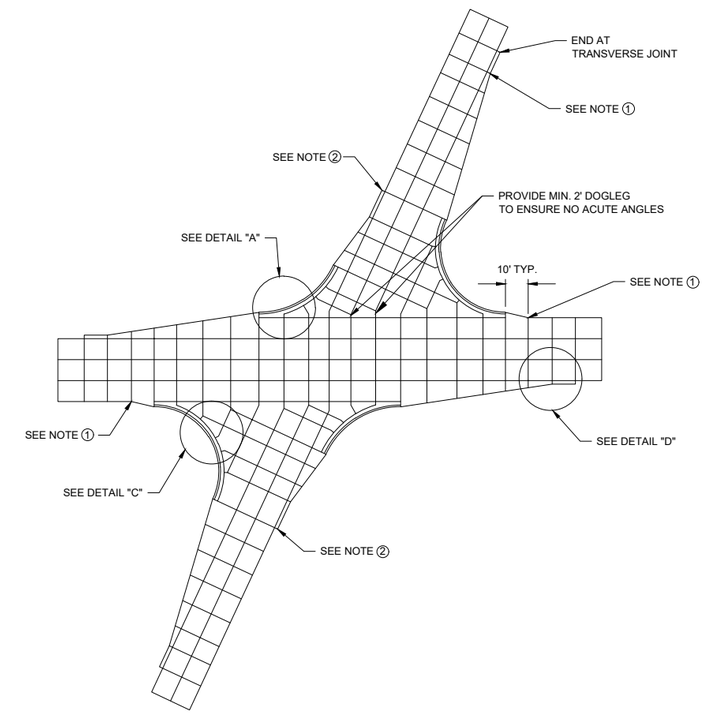

SKEWED INTERSECTION

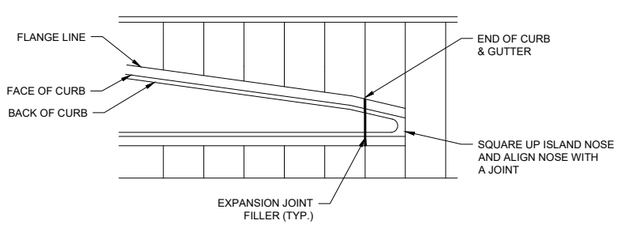

APPROACH TO MEDIAN

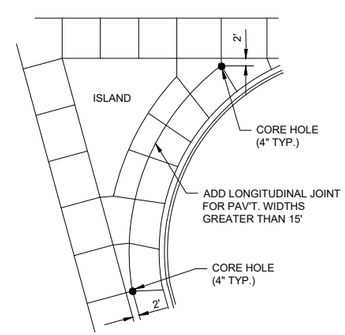

LARGE RIGHT TURN

A / 5.4 CONCRETE PAVEMENT JOINTING

NOT TO SCALE

Little Chute ESTABLISHED 1848
ENGINEERING DEPARTMENT
108 WEST MAIN STREET
LITTLE CHUTE, WISCONSIN 54140

PHEASANT RUN STORM SEWER
PHEASANT RUN
MISCELLANEOUS CONSTRUCTION DETAILS
VILLAGE OF LITTLE CHUTE, WISCONSIN

REV	DATE	BY	DESCRIPTION

DESIGNED:
DRAWN: DEM
CHECKED: REO
APPROVED: CLM

PROJECT NUMBER
XXXXXX

SHEET REFERENCE NO.
5.4

Q:\Dept of Public Works\Engineering Department\2000 - Municipal Projects\Pheasant Run - Riverside Dr Easements\10 - DWG\SHEETS\5.0_DETAILS.dwg, 2/23/2022 9:35:45 AM, KRIS LYONS, _Little Chute-C3D-2018.ctb

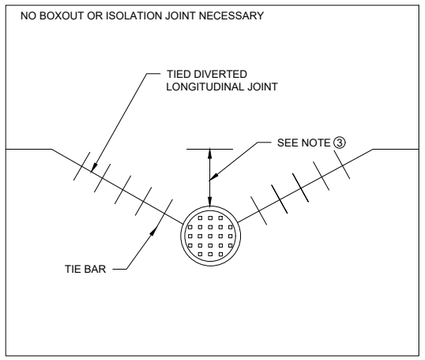

MANHOLE WITH
DIVERTED
LONGITUDINAL
CONTRACTION JOINT

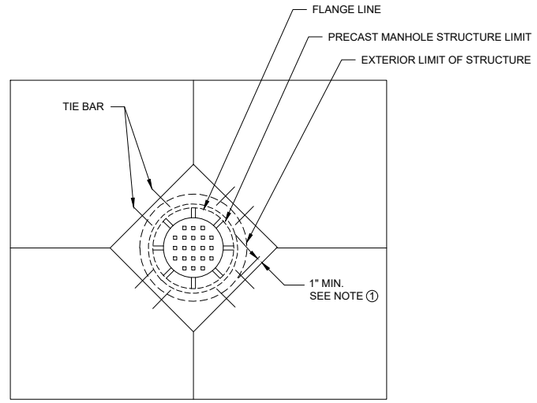

DIAGONAL MANHOLE
BOXOUT
FOR CONSTRUCTION
JOINTS

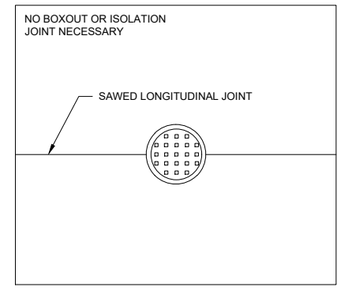

MANHOLE WITH
LONGITUDINAL JOINT

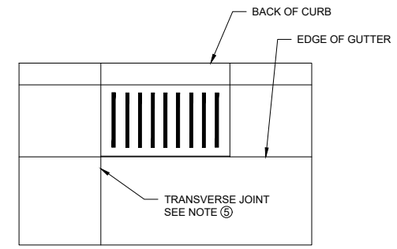

INLET WITH
TRANSVERSE JOINT

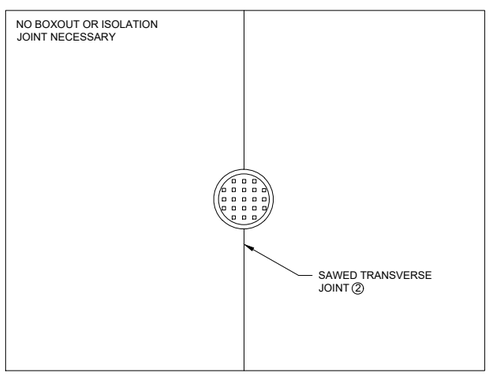

MANHOLE WITH
TRANSVERSE JOINT

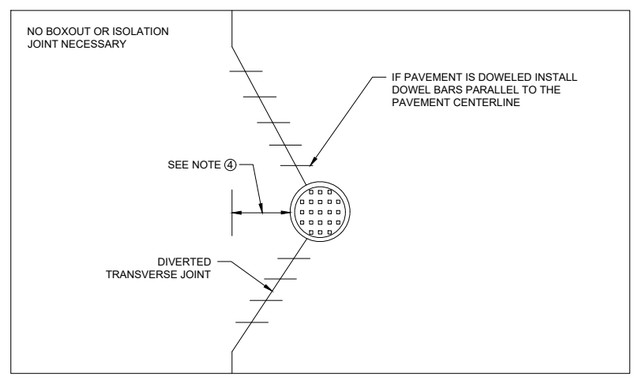

MANHOLE WITH DIVERTED
TRANSVERSE CONTRACTION JOINT

GENERAL NOTES

1. USE BOXOUTS WHEN UTILITY STRUCTURE IS IN THE PATH OF CONSTRUCTION JOINTS. PROVIDE A 1-FOOT MINIMUM CLEARANCE BETWEEN THE EXTERIOR LIMIT OF THE STRUCTURE TO THE DIAMOND BOXOUT.
2. ADJUST TRANSVERSE JOINT TO INTERSECT MANHOLE IF POSSIBLE.
3. IF DISTANCE BETWEEN THE LONGITUDINAL JOINT AND THE EDGE OF MANHOLE IS 2 FEET OR LESS, DIVERT THE LONGITUDINAL JOINT AT A 2:1 TAPER RATE TO THE CENTER OF THE MANHOLE. IF THE DISTANCE IS GREATER THAN 2 FEET, DO NOT DIVERT THE JOINT AND SAW AS NORMAL. PLACE REBAR REINFORCEMENT AROUND THE MANHOLE.
4. IF DISTANCE FROM EDGE OF THE MANHOLE TO THE NEAREST TRANSVERSE JOINT IS 4 FEET OR LESS, REDIRECT JOINT TO INTERSECT THE CENTER OF THE MANHOLE. IF DISTANCE IS GREATER THAN 4 FEET, DO NOT DIVERT THE JOINT AND SAW AS NORMAL. PLACE REBAR REINFORCEMENT AROUND THE MANHOLE.
5. ALIGN TRANSVERSE JOINT WITH ONE EDGE OF INLET WHEN PRACTICAL.

A / 5.5 CONCRETE PAVEMENT JOINTING AT UTILITY FIXTURES
NOT TO SCALE

Little Chute ESTABLISHED 1848
ENGINEERING DEPARTMENT
108 WEST MAIN STREET
LITTLE CHUTE, WISCONSIN 54140

PHEASANT RUN STORM SEWER
PHEASANT RUN
MISCELLANEOUS CONSTRUCTION DETAILS
VILLAGE OF LITTLE CHUTE, WISCONSIN

REV	DATE	BY	DESCRIPTION

DESIGNED:
DRAWN: DEM
CHECKED: REO
APPROVED: CLM

PROJECT NUMBER
XXXXXX
SHEET REFERENCE NO.
5.5

Q:\Dept of Public Works\Engineering Department\2000 - Municipal Projects\Pheasant Run - Riverside Dr Easements\10 - DWGS\SHEETS\5.0_DETAILS.dwg, 2/23/2022 9:35:54 AM, KRIS LYONS, _Little Chute-C3D-2018.ctb

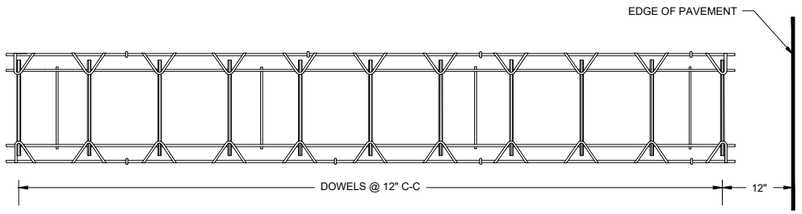

PLAN VIEW

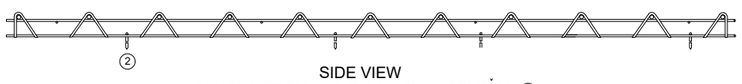

SIDE VIEW
CONTRACTION JOINT DOWEL ASSEMBLY 1

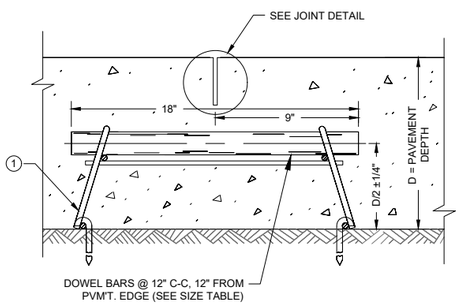

DOWELED CONTRACTION JOINT

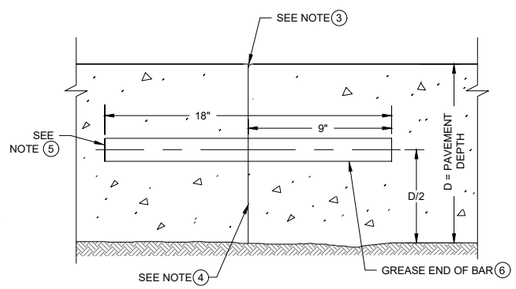

TRANSVERSE CONTRACTION JOINT

PAVEMENT DEPTH, DOWEL BAR SIZE, AND JOINT SPACING TABLE

PAVEMENT DEPTH (D)	DOWEL BAR DIAMETER	CONTRACTION JOINT SPACING
5-1/2", 6", 6-1/2"	NONE	12'
7", 7-1/2"	1"	14'
8", 8-1/2"	1-1/4"	15'
9", 9-1/2"	1-1/4"	15'
10" & ABOVE	1-1/2"	15'

(FOR 11' LANE WIDTH REDUCE CENTER WIDTH TO 1'-0")

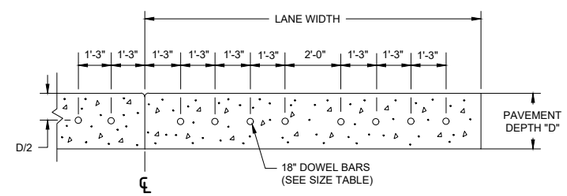

DRILLED DOWEL BAR CONSTRUCTION JOINT 7

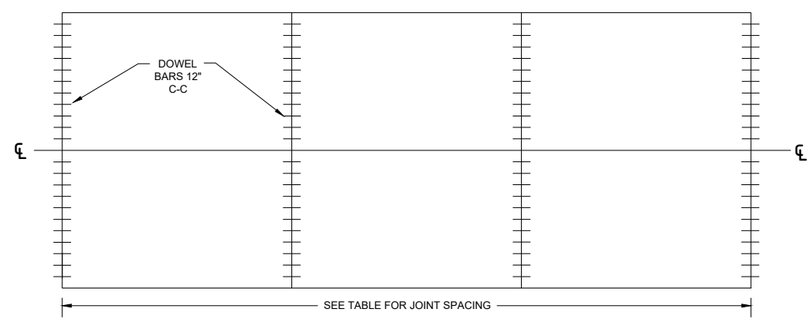

CONTRACTION JOINT LOCATIONS

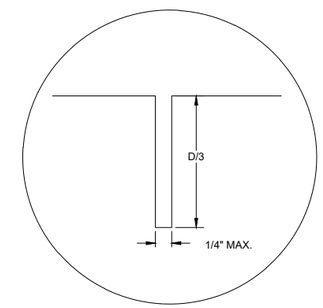

JOINT DETAIL

A 5.6 URBAN DOWELED CONCRETE PAVEMENT
NOT TO SCALE

GENERAL NOTES

CONTRACTION JOINTS:

CONSTRUCT TRANSVERSE CONTRACTION JOINTS NORMAL TO THE CENTERLINE. SHOW THE LOCATION OF CONTRACTION JOINTS THROUGH INTERSECTIONS ON THE PLANS OR AS DIRECTED BY THE ENGINEER.

INSTALL DOWEL BARS PARALLEL TO THE PAVEMENT CENTERLINE AND PAVEMENT SURFACE.

FOR PAVEMENT SLABS OF VARYING WIDTHS, LOCATE THE OUTER MOST DOWEL BAR SO THAT THE CENTER OF THE BAR IS A MINIMUM OF 6 INCHES AND A MAXIMUM OF 18 INCHES FROM THE LONGITUDINAL JOINT AND THE FREE EDGE OF PAVEMENT.

CONSTRUCTION NOTES:

LOCATE CONSTRUCTION JOINTS A MINIMUM OF 6 FEET FROM THE NEAREST CONTRACTION JOINT AND ALIGN PARALLEL TO CONTRACTION JOINTS.

1. OBTAIN THE ENGINEER'S APPROVAL FOR THE USE OF ALTERNATIVE DESIGNS OF THE DOWEL ASSEMBLY. USE MECHANICAL DOWEL BAR INSERTERS OR DOWEL ASSEMBLIES WHEN CONSTRUCTING CONTRACTION JOINTS.
2. SECURE BASKETS WITH ANCHORS TO HOLD DOWEL BARS IN THE CORRECT POSITION AND ALIGNMENT. TYPE, LOCATION, NUMBER, AND LENGTH OF ANCHORS ARE DEPENDENT UPON FIELD CONDITIONS.
3. FORM OR SAW CONSTRUCTION JOINTS. PROVIDE A 1/4" RADIUS AT FORMED JOINTS.
4. PROVIDE A SMOOTH VERTICAL FACE FOR THE ENTIRE DEPTH OF THE PAVEMENT WHEN FORMING CONSTRUCTION JOINTS.
5. INSTALL DOWEL BARS AT CONSTRUCTION JOINTS BY FORMING OR DRILLING. INSTALL FORMED DOWEL BARS 12 INCHES C-C AND 12 INCHES FROM PAVEMENT EDGE. REMOVE EXCESS CONCRETE FROM THE FREE END OF THE DOWEL BAR IF DOWEL BARS ARE FORMED THROUGH A HEADER BOARD. INSTALL DRILLED DOWEL BARS ACCORDING TO *DRILLED DOWEL BAR CONSTRUCTION JOINT* DETAIL.
6. APPLY A THIN UNIFORM COATING OF SURFACE TREATMENT TO THE FREE END OF DOWEL BARS TO PREVENT BONDING.
7. ANCHOR DOWEL BARS INTO DRILLED HOLES WITH AN EPOXY. MAXIMUM DRILLED HOLE SIZE IS 1/8-INCH GREATER THAN THE DOWEL DIAMETER, 9 INCHES IN LENGTH.

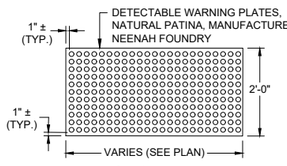

PLAN VIEW

B 6.6 DETECTABLE WARNING FIELD
NOT TO SCALE

	MIN.	MAX.
A	1.6"	2.4"
B	0.65"	1.5"
C	*	*
D	0.9"	1.4"

* THE C DIMENSION IS 50% TO 65% OF THE D DIMENSION.

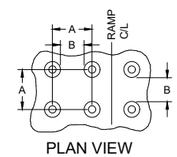

PLAN VIEW

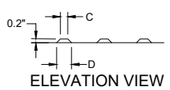

ELEVATION VIEW

C 5.6 TRUNCATED DOMES - DETECTABLE WARNING PATTERN
NOT TO SCALE

* MAXIMUM 2.0% SLOPE IN ALL DIRECTIONS IN FRONT OF GRADE BREAK

** WIDTH SHOWN ELSEWHERE IN THE PLANS

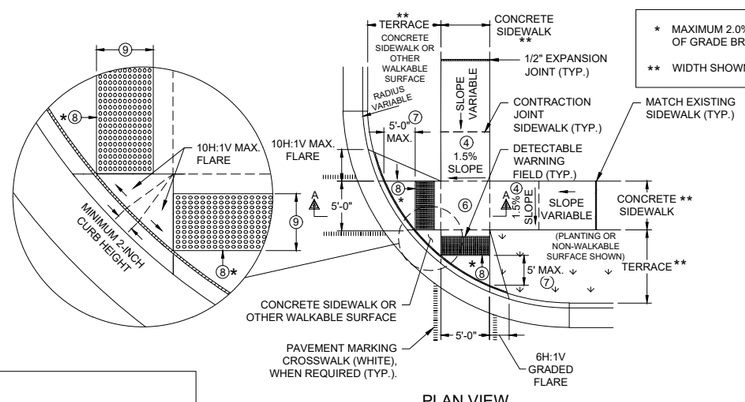

PLAN VIEW

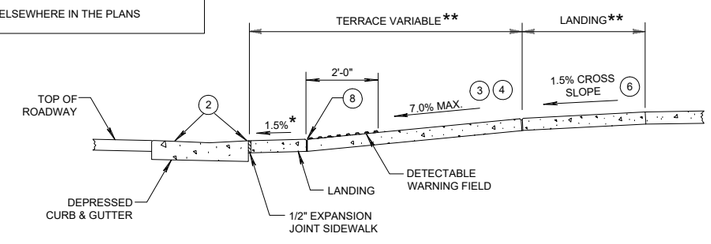

SECTION A-A

D 5.6 CURB RAMP - TYPE 2
NOT TO SCALE

GENERAL NOTES

AVOID PLACING DRAINAGE STRUCTURES, JUNCTION BOXES OR OTHER OBSTRUCTIONS IN FRONT OF RAMP ACCESS AREAS.

DETECTABLE WARNING FIELDS THAT ARE INSTALLED AS A GROUP OR SIDE BY SIDE, SHALL BE FROM THE SAME MANUFACTURER.

2. GRADE CHANGE BETWEEN GUTTER FLAG SLOPE AND THE CURB RAMP SLOPE SHALL NOT EXCEED 11%. MAXIMUM GUTTER FLAG SLOPE IS 4%. PROVIDE LONGITUDINAL DRAINAGE AROUND CURB AND AWAY FROM CURB RAMP. NO VERTICAL LIPS OR DISCONTINUITIES GREATER THAN 1/4-INCH ARE ALLOWED. SLOPE OF CURB HEAD OPENING SHALL MATCH THE RAMP SLOPE, MINIMALLY 1.5% AND NOT TO EXCEED 7%. WHEN ADJACENT TO 1.5% LANDING, CONSTRUCT CURB HEAD OPENING AT 1.5% IN THE DIRECTION OF PEDESTRIAN TRAVEL.
3. ABSOLUTE MAXIMUM 12H:1V (8.33%) CURB RAMP SLOPE IS ALLOWABLE WITH FLATTENED GUTTER FLAG SLOPE (2.67% OR LESS) AND NOT TO EXCEED 11% GRADE CHANGE.
4. ±0.5% CONSTRUCTION TOLERANCE IN SIDEWALK CROSS SLOPE, THE SIDEWALK CROSS SLOPE SHALL NOT EXCEED 2% WITHOUT PRIOR APPROVAL FROM THE ENGINEER.
6. PROVIDE A LEVEL LANDING (MAXIMUM 2% SLOPE) IN ANY DIRECTION OF PEDESTRIAN TRAVEL. STANDARD LANDING SIZE IS 5 FEET X 5 FEET.
7. WHEN THIS GRADE BREAK DISTANCE EXCEEDS 5 FEET, USE RADIAL DETECTABLE WARNING.
8. PROVIDE GRADE BREAK PERPENDICULAR TO DIRECTION OF WHEELCHAIR TRAVEL.
9. WHEN THIS DISTANCE IS LESS THAN 6'-0", IT MAY BE DIFFICULT TO ACHIEVE A 7% SLOPE OR FLATTER ALONG THE RAMP. REDUCE CURB HEIGHT IN TRIANGLE AREA TO ACHIEVE 7% SLOPE OR FLATTER ON RAMP. CONSTRUCT 2-INCH MINIMUM CURB HEIGHT BETWEEN 10:1 FLARES.

Little Chute ESTABLISHED 1848
ENGINEERING DEPARTMENT
108 WEST MAIN STREET
LITTLE CHUTE, WISCONSIN 54140

PHEASANT RUN STORM SEWER
PHEASANT RUN
MISCELLANEOUS CONSTRUCTION DETAILS
VILLAGE OF LITTLE CHUTE, WISCONSIN

REV	DATE	BY	DESCRIPTION

DESIGNED:
DRAWN: DEM
CHECKED: REO
APPROVED: CLM

PROJECT NUMBER
XXXXXX
SHEET REFERENCE NO.
5.6

Q:\Dept of Public Works\Engineering Department\2000 - Municipal Projects\Pheasant Run - Riverside Dr Easements\10 - DWGS\HEETS\5.0_DETAILS.dwg, 2/23/2022 9:36:06 AM, KRIS LYONS, _Little Chute-C3D-2018.ctb

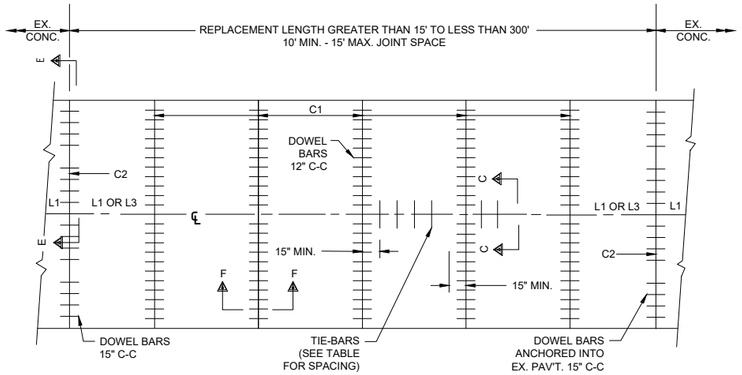

PLAN VIEW
MULTI-LANE CONCRETE PAVEMENT REPLACEMENT

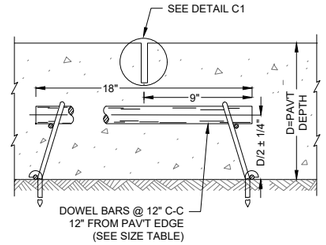

SECTION F-F
CONTRACTION JOINT

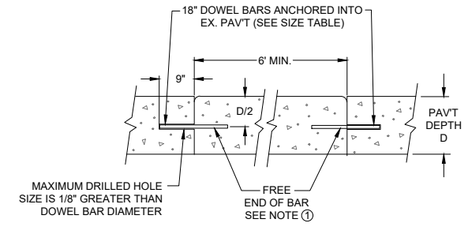

SECTION D - D

GENERAL NOTES:

INSTALL DOWEL BARS PARALLEL TO THE PAVEMENT CENTERLINE AND PAVEMENT SURFACE.

CONCRETE PAVEMENT REPAIRS OF EXISTING NON-DOWELED CONCRETE PAVEMENTS DO NOT NEED TO BE DOWELED.

ANCHOR DOWEL BARS AND TIE BARS INTO DRILLED HOLES WITH AN EPOXY.

FOR MULTI - LANE CONCRETE PAVEMENT REPLACEMENTS, PROVIDE A MINIMUM DISTANCE OF 15 INCHES FROM ALL TRANSVERSE JOINTS OR EDGES OF REPLACEMENT TO THE CENTER OF THE TIE-BAR NEAREST THAT JOINT OR EDGE.

1. APPLY A THIN UNIFORM COATING SURFACE TREATMENT TO THE FREE END OF DOWEL BARS TO PREVENT BONDING.

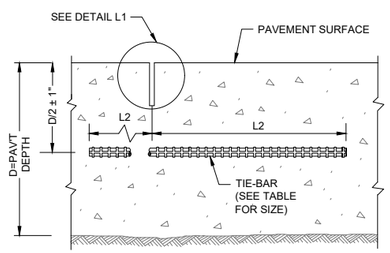

SECTION C-C
SAWED LONGITUDINAL JOINT

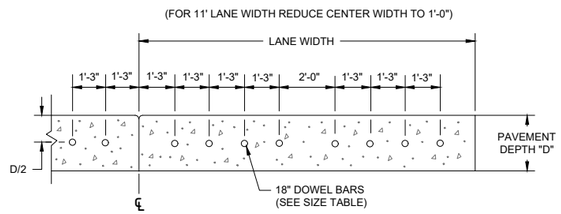

SECTION E-E
DRILLED DOWEL BAR CONSTRUCTION JOINT

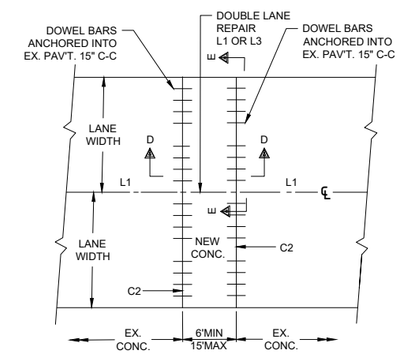

PLAN VIEW
MULTI - LANE CONCRETE PAVEMENT REPAIR

PAVEMENT DEPTH, DOWEL BAR SIZE AND JOINT SPACING TABLE

PAVEMENT DEPTH (D)	DOWEL BAR DIAMETER	CONSTRUCTION JOINT SPACING
5 ½",6", 6 ½"	NONE	12'
7",7 ½"	1"	14'
8",8 ½"	1 ¼"	15'
9",9 ½"	1 ¼"	15'
10" & ABOVE	1 ½"	15'

TIE-BAR TABLE

PAVEMENT DEPTH (D)	TIE-BAR SIZE	TIE-BAR LENGTH (L)	MAX. TIE-BAR SPACING
< 10 ½"	NO. 4	30"	36"

A 5.7 MULTI-LANE CONCRETE REPLACEMENT
NOT TO SCALE

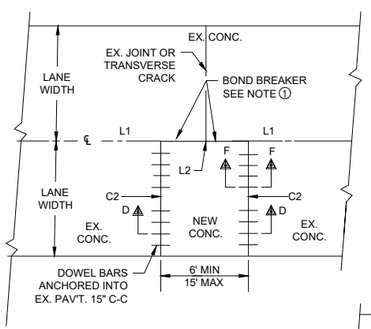

PLAN VIEW
SINGLE LANE
CONCRETE PAVEMENT REPAIR

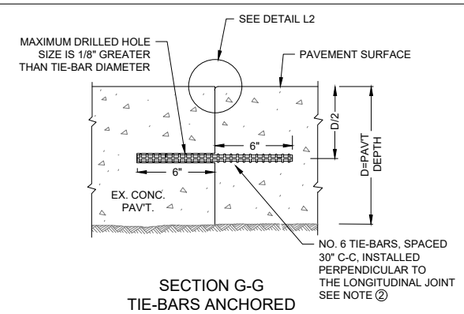

SECTION G-G
TIE-BARS ANCHORED
INTO EXISTING PAVEMENT

GENERAL NOTES

1. USE AN ENGINEER - APPROVED BOND BREAKER (E.G. RELEASE AGENT, CURING COMPOUND) FOR SINGLE LANE REPAIRS UP TO 15 FEET IN LENGTH.

2. ANCHOR TIE-BARS INTO DRILLED HOLES WITH AN EPOXY.

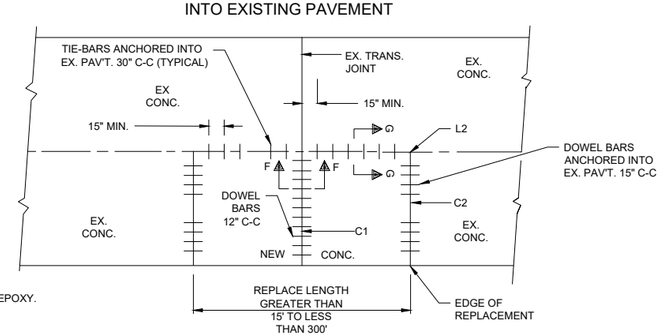

PLAN VIEW

B 5.7 SINGLE LANE CONCRETE REPLACEMENT
NOT TO SCALE

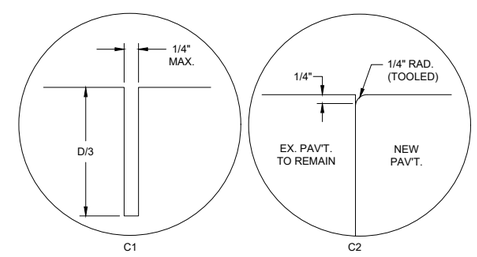

TRANSVERSE JOINTS

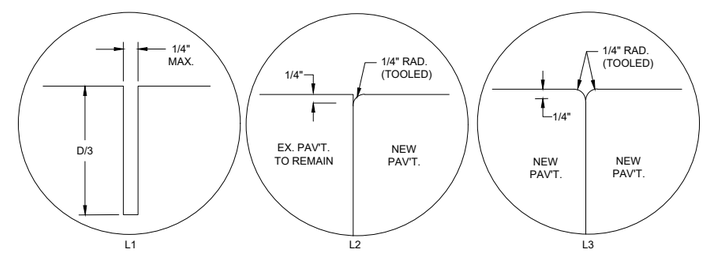

LONGITUDINAL JOINTS

C 5.7 JOINTS DETAIL
NOT TO SCALE

Little Chute ESTABLISHED 1848
ENGINEERING DEPARTMENT
108 WEST MAIN STREET
LITTLE CHUTE, WISCONSIN 54140

PHEASANT RUN STORM SEWER
PHEASANT RUN
MISCELLANEOUS CONSTRUCTION DETAILS
VILLAGE OF LITTLE CHUTE, WISCONSIN

REV	DATE	BY	DESCRIPTION

DESIGNED:
DRAWN: DEM
CHECKED: REO
APPROVED: CLM

PROJECT NUMBER
XXXXXX
SHEET REFERENCE NO.
5.7

Q:\Dept of Public Works\Engineering Department\2000 - Municipal Projects\Pheasant Run - Riverside Dr Easements\10 - DWG\SHEETS\5.0_DETAILS.dwg; 2/23/2022 9:36:15 AM; KRIS LYONS; _Little Chute-C3D-2018.ctb

GENERAL NOTES FOR DRIVEWAYS AND SIDEWALKS

- LOCATIONS FOR DRIVEWAY OPENINGS AND LENGTH OF TRANSITION AREAS FOR DRIVEWAYS SHALL BE DETERMINED BY THE ENGINEER IN THE FIELD.
- ALL RESIDENTIAL DRIVEWAY APRONS AND SIDEWALK THROUGH DRIVEWAYS SHALL BE REPLACED WITH 6-INCH CONCRETE OVER 3" OF 1-1/4" BASE AGGREGATE DENSE.
- ALL COMMERCIAL DRIVEWAY APRONS AND SIDEWALK THROUGH DRIVEWAYS SHALL BE REPLACED WITH 7-INCH CONCRETE OVER 3" OF 1-1/4" BASE AGGREGATE DENSE.
- NO STEEL (WIRE MESH, REBAR, ETC.) ALLOWED IN FLATWORK WITHIN PUBLIC RIGHT OF WAY.
- CONTRACTOR SHALL DIE STAMP ALL CONCRETE POURED WITHIN PUBLIC RIGHT OF WAY.

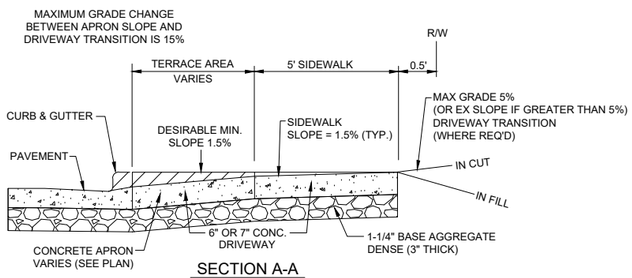

SECTION A-A

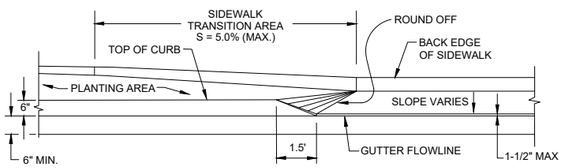

PROFILE PARALLEL TO CENTERLINE OF ROADWAY

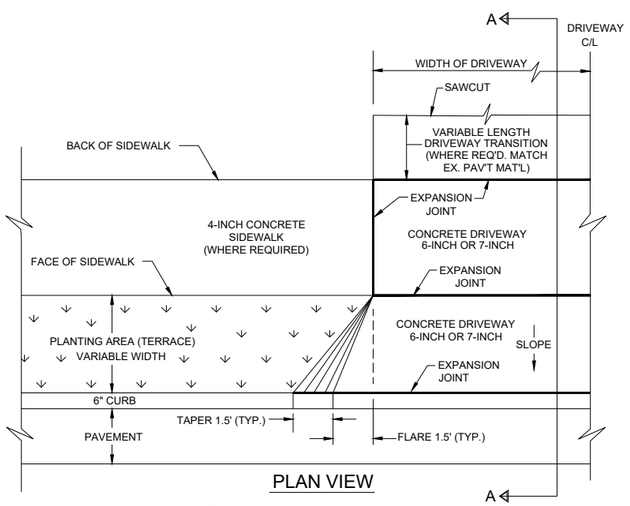

PLAN VIEW

E 5.8 CONCRETE DRIVEWAY
NOT TO SCALE

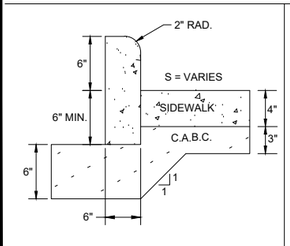

G 5.8 SIDEWALK CURB
NOT TO SCALE

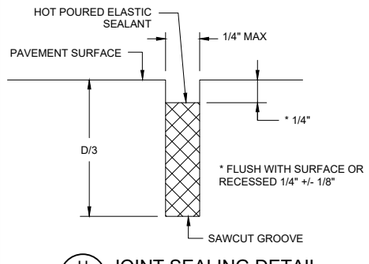

H 5.8 JOINT SEALING DETAIL
NOT TO SCALE

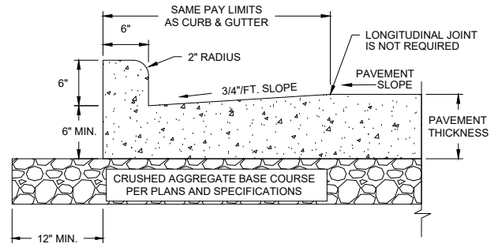

A 5.8 PARTIAL SECTION OF PAVEMENT WITH CURB & GUTTER
NOT TO SCALE

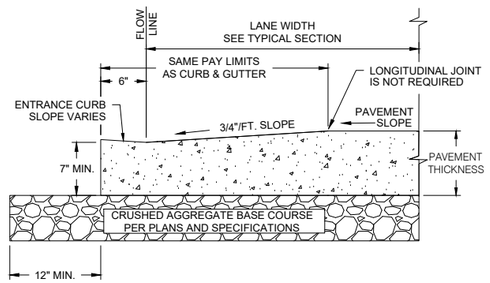

B 5.8 DRIVEWAY ENTRANCE CURB
NOT TO SCALE

VERTICAL REINFORCEMENT SHALL BE NO.4 EPOXY COATED BENT TIE BAR SPACED @ 30" C-C. PROVIDE BAR LENGTH AS NECESSARY TO OBTAIN 2" CLEAR FROM TOP OF WALL.

HORIZONTAL REINFORCEMENT NO. 4 EPOXY COATED BARS. EACH BAR SHALL BE TIED TO EACH VERTICAL BAR WITH THE UPPER HORIZONTAL BAR TIED 3" FROM THE TOP OF THE VERTICAL BAR, AND THE LOWER HORIZONTAL BAR TIED 2" ABOVE THE TOP OF WALK. HORIZONTAL BARS SHALL BE LAPPED AND TIED, 12".

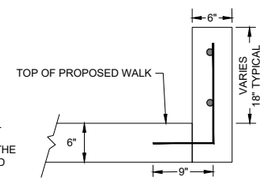

D 5.8 CONCRETE RETAINING CURB DETAIL
NOT TO SCALE

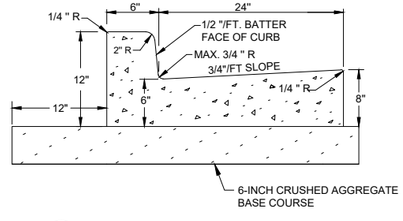

F 5.8 CONCRETE CURB AND GUTTER
NOT TO SCALE

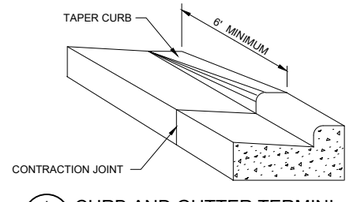

I 5.8 CURB AND GUTTER TERMINI
NOT TO SCALE

NOTE:
INSTALL EPOXY COATED TIE-BARS AND ANCHOR INTO EXISTING CONCRETE USING EPOXY PER VILLAGE OF LITTLE CHUTE SPECIFICATIONS.

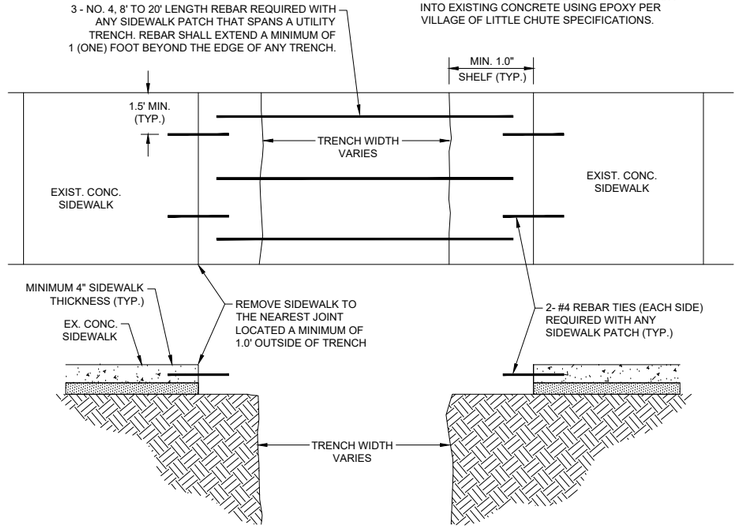

C 5.8 TYPICAL SIDEWALK PATCH DETAIL
NOT TO SCALE

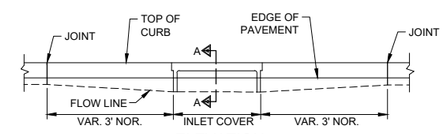

ELEVATION

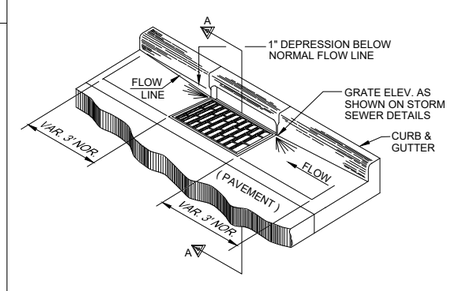

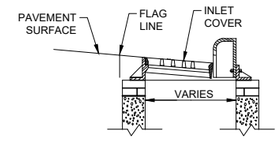

SECTION A-A

J 5.8 CURB AND GUTTER AT INLETS
NOT TO SCALE

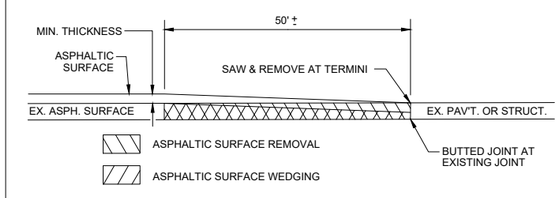

K 5.8 OVERLAP JOINT, BUTTED DETAIL
NOT TO SCALE

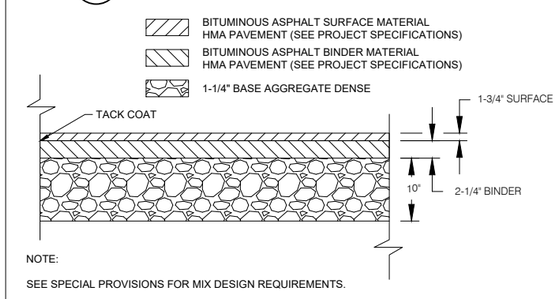

NOTE:
SEE SPECIAL PROVISIONS FOR MIX DESIGN REQUIREMENTS.

L 5.8 TYPICAL ASPHALT PAVEMENT SECTION
NOT TO SCALE

Little Chute ESTABLISHED 1848
ENGINEERING DEPARTMENT
108 WEST MAIN STREET
LITTLE CHUTE, WISCONSIN 54140

PHEASANT RUN STORM SEWER
PHEASANT RUN
MISCELLANEOUS CONSTRUCTION DETAILS
VILLAGE OF LITTLE CHUTE, WISCONSIN

REV	DATE	BY	DESCRIPTION

DESIGNED:
DRAWN: DEM
CHECKED: REO
APPROVED: CLM

PROJECT NUMBER
XXXXXX
SHEET REFERENCE NO.
5.8

Q:\Dept of Public Works\Engineering Department\2000 - Municipal Projects\Pheasant Run - Riverside Dr Easements\10 - DWG\SHEETS\5.0_DETAILS.dwg, 2/23/2022 9:36:25 AM, KRIS LYONS, _Little Chute-C3D-2018.ctb

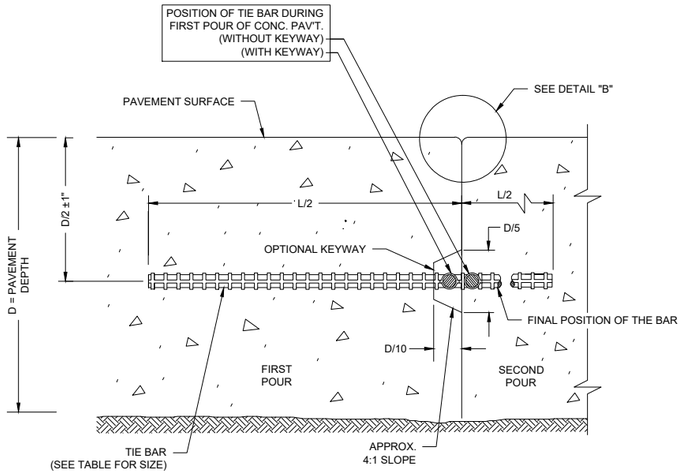

CONSTRUCTION JOINT

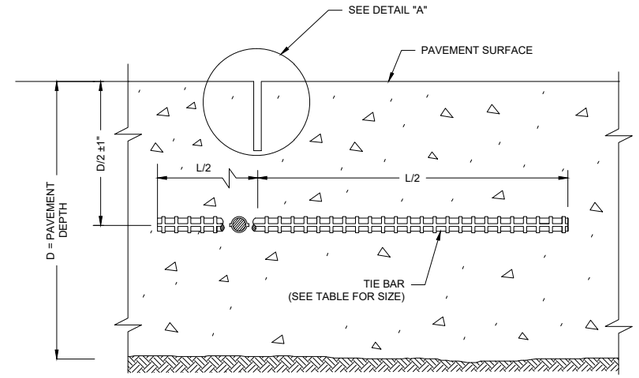

SAWED JOINT

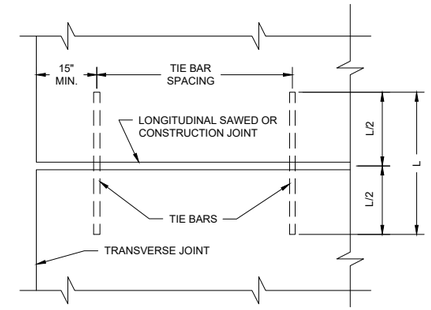

PLAN VIEW
SHOWING LOCATION OF TIE BARS

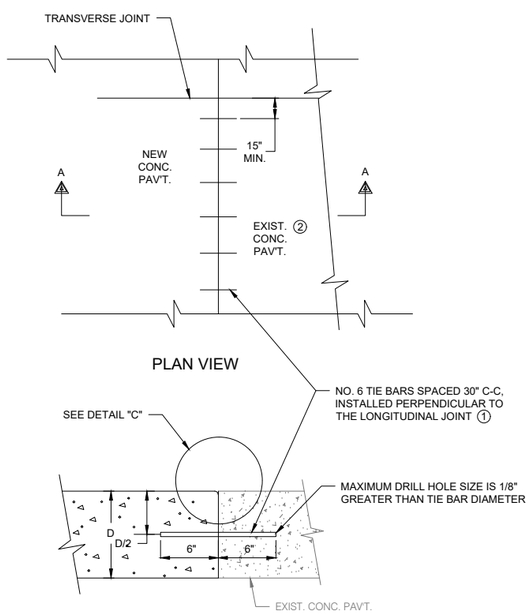

SECTION A - A
LONGITUDINAL CONSTRUCTION JOINT
TIE BARS ANCHORED
INTO EXISTING PAVEMENT

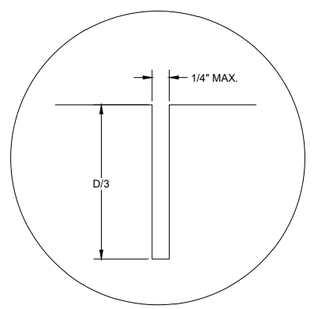

DETAIL "A"

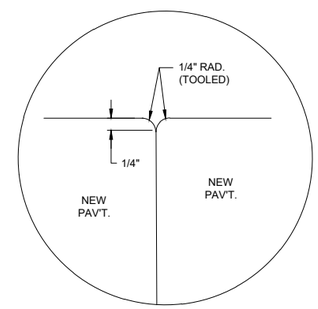

DETAIL "B"

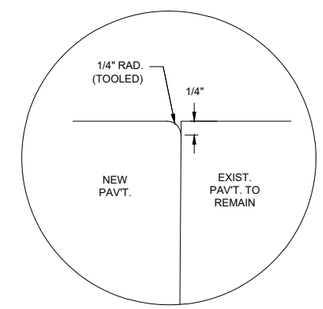

DETAIL "C"

TIE BAR TABLE

PAVEMENT DEPTH (D)	TIE BAR SIZE	TIE BAR LENGTH (L)	MAX. TIE BAR SPACING
<10-1/2"	NO. 4	30"	36"
≥10-1/2"	NO. 5	36"	36"
	NO. 4 *	30"	24" **

* SUBSTITUTE BENT BARS AT LONGITUDINAL JOINTS WHEN EQUIPMENT LIMITATIONS DURING CONSTRUCTION WARRANT (e.g. AUXILIARY LANES OR TURN LANES)

** CONFORM TO 15" MINIMUM SPACING FROM TRANSVERSE JOINTS; SPACING BETWEEN TIE BARS WILL BE 30" AT TRANSVERSE JOINTS.

GENERAL NOTES

CREATE A LONGITUDINAL JOINT FOR PAVEMENT WIDTHS GREATER THAN 15 FEET.

CORRELATE LONGITUDINAL JOINTS WITH LANE LINES WHEN POSSIBLE.

① ANCHOR TIE BARS INTO DRILLED HOLES WITH AN EPOXY.

② PAVEMENT THAT WAS IN PLACE PRIOR TO THE CONTRACT.

A / 5.9 LONGITUDINAL JOINTS AND TIES
NOT TO SCALE

Little Chute ESTABLISHED 1848
ENGINEERING DEPARTMENT
108 WEST MAIN STREET
LITTLE CHUTE, WISCONSIN 54140

PHEASANT RUN STORM SEWER
PHEASANT RUN
MISCELLANEOUS CONSTRUCTION DETAILS
VILLAGE OF LITTLE CHUTE, WISCONSIN

REV	DATE	BY	DESCRIPTION

DESIGNED:
DRAWN: DEM
CHECKED: REO
APPROVED: CLM

PROJECT NUMBER
XXXXXX
SHEET REFERENCE NO.
5.9

Q:\Dept of Public Works\Engineering Department\2000 - Municipal Projects\Pheasant Run - Riverside Dr Easements\10 - DWG\SHEETS\5.0_DETAILS.dwg, 2/23/2022 9:36:35 AM, KRIS LYONS, _Little Chute-C3D-2018.ctb

RIP-RAP

1. RIP-RAP SHALL BE IN ACCORDANCE WITH THE PROJECT SPECIFICATIONS.
2. RIP-RAP SHALL BE ANGULAR. ROUND RIP-RAP IS NOT PERMITTED.
3. LIGHT RIP-RAP SHALL BE UNDERLAIN WITH TYPE R FABRIC.
4. MEDIUM AND HEAVY RIP-RAP SHALL BE UNDERLAIN WITH TYPE HR FABRIC.

AVERAGE DIMENSION RANGES FOR EACH RIP-RAP GRADE

EX-LIGHT RIP-RAP (inch)	LIGHT RIP-RAP (inch)	MEDIUM RIP-RAP (inch)	HEAVY RIP-RAP (inch)	EX-HEAVY RIP-RAP (inch)	IN-PLACE VOLUME OF STONES
> 10	> 16	> 20	> 25	> 30	0%
7 - 9	11 - 13	14 - 16	18 - 20	22 - 25	10% - 14%
5 - 7	9 - 11	11 - 14	14 - 18	18 - 22	15% - 21%
2 - 5	4 - 9	5 - 11	6.5 - 14	8 - 18	20% - 28%
< 2	< 4	< 5	< 6.5	< 8	5% - 7%
< 1	< 1	< 1	< 1	< 1	2% or less

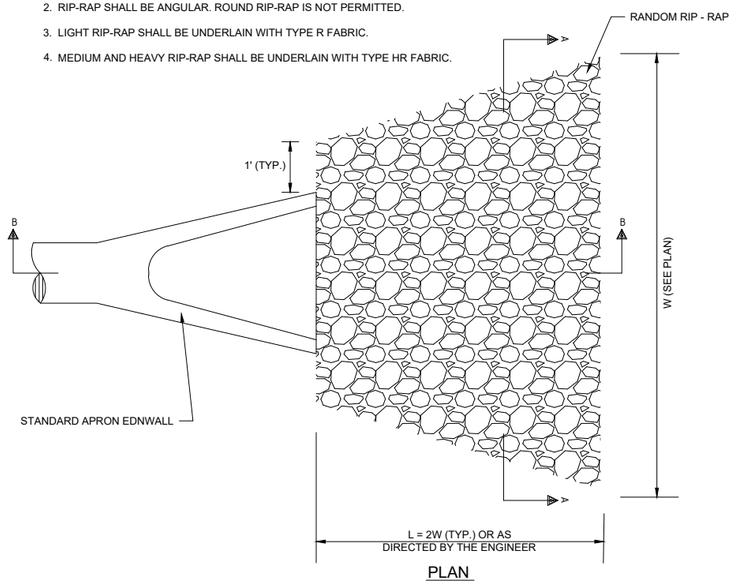

PLAN

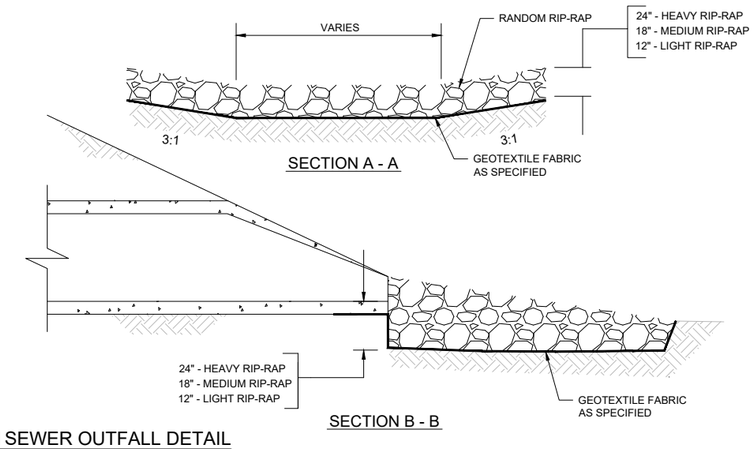

SECTION A - A

SECTION B - B

B / 5.10 RIP-RAP AT STORM SEWER OUTFALL DETAIL
NOT TO SCALE

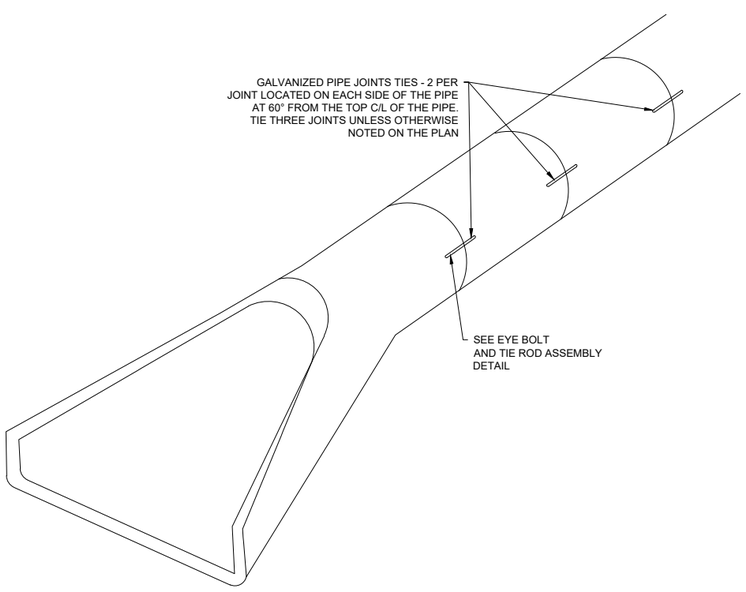

A / 5.10 JOINT TIE DETAIL
NOT TO SCALE

EYE BOLT DIMENSION TABLE		
PIPE SIZE	L = LENGTH	
	TONGUE AND GROOVE PIPE	MODIFIED BELL PIPE
18" TO 24"	4-1/2"	6-1/4"
30"	5"	7"
36"	5-1/2"	7"
42"	6"	
48"	6-1/2"	
60"	7-1/2"	
66"	8"	

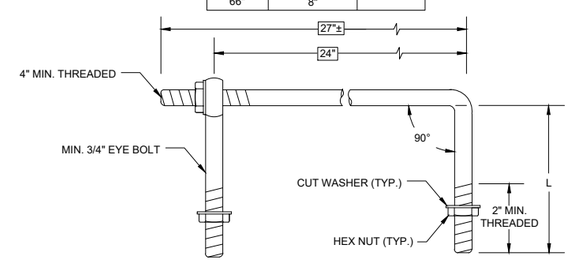

EYE BOLT AND TIE ROD

NOTE:
TWO EYE BOLTS MAY BE USED
WITH A 30" LONG THREADED ROD
IN LIEU OF THE 90° BENT TIE ROD.

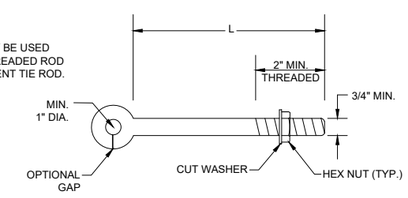

EYE BOLT

D / 5.10 EYE BOLT AND TIE ROD ASSEMBLY DETAIL
NOT TO SCALE

Little Chute ESTABLISHED 1848
ENGINEERING DEPARTMENT
108 WEST MAIN STREET
LITTLE CHUTE, WISCONSIN 54140

PHEASANT RUN STORM SEWER
PHEASANT RUN
MISCELLANEOUS CONSTRUCTION DETAILS
VILLAGE OF LITTLE CHUTE, WISCONSIN

REV	DATE	BY	DESCRIPTION

DESIGNED:
DRAWN: DEM
CHECKED: REO
APPROVED: CLM

PROJECT NUMBER
XXXXXX
SHEET REFERENCE NO.
5.10

Q:\Dept of Public Works\Engineering Department\2000 - Municipal Projects\Pheasant Run - Riverside Dr Easements\10- DWG\SHEETS\5.0_DETAILS.dwg, 2/23/2022 9:37:00 AM, KRIS LYONS, _Little Chute-C3D-2018.ctb

STORM QTY'S

12" PVC Storm Sewer Main			
	STRUCTURES		
	START	END	LENGTH
PHEASANT RUN	M-4	M-3	16.0
UNDISTRIBUTED			4.0
BID ITEM # 1 TOTALS			**20.0**

15" PVC Storm Sewer Main			
	STRUCTURES		
	START	END	LENGTH
PHEASANT RUN	CO-2	M-5	15.0
UNDISTRIBUTED			5.0
BID ITEM # 2 TOTALS			**20.0**

54" RCP Storm Sewer Main (Native Backfill)			
	STRUCTURES		
	START	END	LENGTH
PHEASANT RUN	CO-1	M-1	16.0
UNDISTRIBUTED			0.0
BID ITEM # 4 TOTALS			**16.0**

48" RCP Storm Sewer Main			
	STRUCTURES		
	START	END	LENGTH
PHEASANT RUN	M-1	M-2	77.4
PHEASANT RUN	M-2	M-3	155.8
UNDISTRIBUTED			1.8
BID ITEM # 3 TOTALS			**235.0**

48" x 36" RCP Storm Sewer Main (Granular Backfill)			
	STATION		
	START	END	LENGTH
PHEASANT RUN	3+15	3+35	20.0
UNDISTRIBUTED			1.0
BID ITEM # 5 TOTALS			**21.0**

48" x 36" RCP Storm Sewer Main (Native Backfill)			
	STRUCTURES		
	START	END	LENGTH
PHEASANT RUN	M-3	M-5	132.0
PHEASANT RUN	M-5	ENDWALL	78.0
UNDISTRIBUTED			1.0
BID ITEM # 6 TOTALS			**211.0**

		BID # 13	BID # 14	BID # 15	BID # 16	BID # 17
		RE-CONNECT	CONNECT	CONNECT	STORM	STORM
		EX. STORM	TO EX.	TO EX.	SEWER	SEWER
	STA.	LATERAL	15" STORM	54" STORM	ULO	STAKING
PHEASANT RUN	4+58 LT	1				
PHEASANT RUN	4+13 LT		1			
PHEASANT RUN	0+00 CL			1		
PHEASANT RUN					1	
PHEASANT RUN						1
PHEASANT RUN		1	1	1	1	1
UNDISTRIBUTED		0	0	0	1	0
CONTRACT TOTALS		**1**	**1**	**1**	**2**	**1**

		BID # 7	BID # 8	BID # 9	BID # 10	BID # 11	BID # 12
		STORM INLET MH	STORM MH	BOX MH	BOX MH INLET	FIELD INLET	43"x68" APRON
		7' DIA	8' DIA	9'x9'	9'x9'	30" DIA	ENDWALL
		V.F.	V.F.	V.F.	V.F.	EACH	EACH
PHEASANT RUN	M-2	7.72					
PHEASANT RUN	M-1		11.33				
PHEASANT RUN	M-3			9.96			
PHEASANT RUN	M-5				6.17		
PHEASANT RUN	M-4					1.00	
PHEASANT RUN	ENDWALL						1.00
PHEASANT RUN		7.72	11.33	9.96	6.17	1.00	1.00
UNDISTRIBUTED		0.03	0.02	0.04	0.03	0.00	0.00
CONTRACT TOTALS		**7.75**	**11.35**	**10.00**	**6.20**	**1.00**	**1.00**

PAVEMENT QTY'S

	BID # 18	BID # 19	BID # 20	BID # 21	BID # 22	BID # 23	BID # 24	BID # 25	BID # 26	BID # 27	BID # 28	BID # 29	BID # 30	BID # 31	BID # 32	BID # 33	BID # 34	BID # 35	BID # 36	BID # 37	BID # 38	BID # 39	BID # 40	BID # 41	BID # 42		
	Sawcut Concrete Pavement	Drilled #6 Tie Bars	Common Excavation	Import Clean Fill	4" Topsoil, Seed, Fertilzer, & Erosion <at (Class I, Urban, Type b)	Base Aggregate Dense 1-1/4"	Heavy Rip - Rap With Geotextile Fabric	8" Concrete Pavement (Non-Doweled) with Integral Curb	Remove Concrete Pavement, includes Curb and Gutter	Traffic Control	Silt Fence	Turbidity Barrier	Ditch Check	Watering (For Compaction and Dust Control)	Site Trackout Control	Remove and Replace Split Rail Fence	Cobble Stone Rip-Rap With Geotextile Fabric	Extend Sanitary Lateral (Includes Connection)	Extend Water Lateral (Includes New Curb Stop)	Relay Water Lateral (Includes New Curb Stop)	Re - Connect Sanitary Lateral	Inlet Protection Type D-HR	Clear and Grubbing	Remove Existing Tree	Remove Existing Tree Stump		
PHEASANT RUN	55.0	22.0	25.0	785.0	2390.0	25.0	20.0	40.0	40.0	1.0	110.0	20.0	30.0	1.0	1.0	1.0	40.0	45.0	45.0	70.0	1.0	5.0	1.0	324.0	29.0	PHEASANT RUN	
	L.F.	EACH	C.Y.	C.Y.	S.Y.	C.Y.	S.Y.	S.Y.	S.Y.	L.S.	L.F.	L.F.	EACH	L.S.	EACH	L.S.	C.Y.	L.F.	L.F.	L.F.	EACH	EACH	L.S.	I.D.	I.D.		
Contract Total	**55.0**	**22.0**	**25.0**	**785.0**	**2390.0**	**25.0**	**20.0**	**40.0**	**40.0**	**1.0**	**110.0**	**20.0**	**30.0**	**1.0**	**1.0**	**1.0**	**40.0**	**45.0**	**45.0**	**70.0**	**1.0**	**5.0**	**1.0**	**324.0**	**29.0**	**Contract Total**	

Little Chute ESTABLISHED 1848
ENGINEERING DEPARTMENT
108 WEST MAIN STREET
LITTLE CHUTE, WISCONSIN 54140

2022 PHEASANT RUN STORM SEWER
PHEASANT RUN
STORM AND PAVING QUANTITIES
VILLAGE OF LITTLE CHUTE, WISCONSIN

REV	DATE	BY	DESCRIPTION

DESIGNED:
DRAWN: DEM
CHECKED: REO
APPROVED: CLM

PROJECT NUMBER
XXXXXXX

SHEET REFERENCE NO.
6.0

Q:\Dept of Public Works\Engineering Department\2000 - Municipal Projects\Pheasant Run - Riverside Dr Easements\10 - DWG\SHEETS\6.0_QUANTITIES.dwg; 2/23/2022 9:37:08 AM; KRIS LYONS; _Little Chute-C3D-2018.ctb

STORM SEWER COMPUTATIONS FOR: Pheasant Run Storm

Project Number:

Sheet No. 1 of 1
Computed By: DEM
Date: 1-Dec-21

SEWER LOCATION		DRAINAGE AREA			RAINFALL AND RUNOFF DATA				RUNOFF	SEWER DESIGN COMPUTATIONS									TIME IN SEWER		ELEVATIONS			
Upstream Manhole	Down stream Manhole	a Individual Area (acres)	A Sum of Area (acres)	C Individual Impervious coeff.	Individual Ca	Sum of Ca	Rainfall Frequency (years)	I Rainfall Intensity (in./hr.)	Total Drainage (cfs)	Length of Sewer (feet)	Manning's Number	Pipe Diameter (inches)	Necessary Drop (feet)	Actual Drop (feet)	Slope (ft./ft.)	Parts Full Actual Drop	Pipe Cap. Actual Drop (cfs)	Velocity Actual Drop (cfs)	Time of Flow in Section (min.)	Total Elapsed Time (min.)	Upstream M.H. Rim Elevation (feet)	Invert Elevations Upper End (feet)	Invert Elevations Lower End (feet)	Cover To Crown (feet)
																				15.00				
EX	M-1	63.54	63.54	0.48	30.50	30.50	10	4.36	132.97	156	0.013	54	0.71	0.78	0.00500	0.78	139.05	9.98	0.26	15.26		671.43	670.65	
M-1	M-2		63.54	0.48		30.50	10	4.33	131.92	77.39	0.013	48	0.65	1.08	0.01400	0.66	169.96	14.98	0.09	15.35	676.98	670.65	669.57	
M-2	M-3	1.27	64.81	0.48	0.61	31.11	10	4.31	134.21	155.84	0.013	48	1.36	2.49	0.01600	0.64	181.70	15.85	0.16	15.51	709.39	669.57	667.07	
M-3	M-5		65.57	0.48		31.34	10	4.29	134.53	152.39	0.013	54	0.71	0.91	0.00600	0.73	152.32	10.84	0.23	15.74	708.00	657.46	656.55	
M-5	EWAL	0.44	68.39	0.48	0.21	32.69	10	4.26	139.36	77.66	0.013	54	0.39	0.54	0.00700	0.70	164.53	11.63	0.11	15.86	707.35	656.55	656.00	
																				5.00				
M-4	M-3	0.76	0.76	0.30	0.23	0.23	10	6.27	1.43	17.16	0.013	12	0.03	0.17	0.01000	0.44	3.56	4.30	0.07	5.07	708.53	705.00	704.83	
																				5.00				
EX	M-5	2.38	2.38	0.48	1.14	1.14	10	6.27	7.17	133.00	0.013	15	1.64	6.12	0.04600	0.51	13.85	11.41	0.19	5.19	708.42	704.26	698.14	

Little Chute ESTABLISHED 1848
ENGINEERING DEPARTMENT
108 WEST MAIN STREET
LITTLE CHUTE, WISCONSIN 54140

PHEASANT RUN STORM SEWER
PHEASANT RUN
STORM MODELING
VILLAGE OF LITTLE CHUTE, WISCONSIN

REV	DATE	BY	DESCRIPTION

DESIGNED:
DRAWN: DEM
CHECKED: REO
APPROVED: CLM

PROJECT NUMBER
XXXXXXX
SHEET REFERENCE NO.
7.0

Q:\Dept of Public Works\Engineering Department\2000 - Municipal Projects\Pheasant Run - Riverside Dr Easements\10 - DWG\SHEETS\7.0 STORM MODELING.dwg, 2/23/2022 9:37:17 AM, KRIS LYONS, _Little Chute-C3D-2018.ctb

CORRESPONDENCE/MEMORANDUM

State of Wisconsin

DATE: 04/28/2022 FILE REF: Pheasant Run Enclosure

TO: Nicole Hays

FROM: Andrew Hudak

SUBJECT: Site evaluation of UNT to Fox River @ Pheasant Run

On 4/13/2022, Andrew Hudak, Nicole Hays, Tom Meronek, Brian Woodbury, and Ryan Pichler from the WDNR met with representatives from the Village of Little Chute to evaluate impacts from a proposed enclosure of a stream along Pheasant Run. The stream is an unnamed tributary to the Fox River. The stream is unmapped on the SWDV and there no historical stream is identified on the USGS quad. The topographic map indicates a ravine extending from the Fox River draining upslope areas. It was likely a small, ephemeral stream historically existed, or this was a dry ravine. The development within the drainage area appears to have drastically altered the hydrology leading to the formation of a stream with defined bed and banks and significant re-occurring flow. Without further assessment, it is unknown if the stream is perennial or intermittent, but information provided leads to evidence that the stream contains intermittent flow. Currently the stream supports macroinvertebrates and likely forage fish in lower sections with the habitat present. During the site evaluation, numerous amphipods and isopods were observed on rocks within the stream. The stream is roughly 1 meter wide with a bottom substrate composed of a mix of gravel and cobble. The banks consist of wire gabion baskets filled with cobble sized material. The gabion walls are in disrepair and failing. The stream is a tributary to the Lower Fox River which is on the states 303 (d) list of impaired water for nutrient and sediment impairments.

Significant Concern-

- The stream supports at least a macroinvertebrate community and quite possibly non-game forage fish in the lower reaches.
- Enclosures significantly impact aquatic species passage above and below, destroy habitat and impact natural stream processes of sediment movement and nutrient sequestration impacting water quality.
- Significant concerns with setting a precedent that would have cumulative impacts to fish/wildlife habitat and water quality in the Lower Fox River Basin if similar projects would be proposed. There are numerous waterways in the local vicinity with similar conditions that all provide unique qualities to the Lower Fox River.

Options for minimization of Impacts

- The applicant did not provide alternatives to stabilization of the stream banks using riprap or integrated bank treatments.
- Viable alternatives exist to an enclosure of the stream that would limit impacts and provide for a minimization to resource impacts. An integrated bank treatment structure could be designed to meet project goals while improving water quality and habitat conditions within the stream while maintaining an open channel.

Printed on Recycled Paper

Hays, Nicole M - DNR

From: Meronek, Thomas - DNR
Sent: Wednesday, April 27, 2022 7:23 PM
To: Hays, Nicole M - DNR; Hudak, Andrew J - DNR; Woodbury, Bryan J - DNR
Subject: RE: Stream Enclosure - village of little chute

Follow Up Flag: Follow up
Flag Status: Flagged

Nicole,

Fish Management would like to see at least a partial open channel, per our field discussions. This will be the best option for the long term versus a closed pipe system.

We understand the desire of the Village, but this does not appear to be any sort of emergency that requires immediate action. I do not understand why the system is considered not connected unless it is in an enclosure. It appears that if that were not the case they could receive the grant funding and engineer a workable open channel solution.

Thanks.

We are committed to service excellence.
Visit our survey at http://dnr.wi.gov/customersurvey to evaluate how I did.

Tom Meronek
Oshkosh Team Fisheries Supervisor
Wisconsin Department of Natural Resources
427 East Tower Drive, Wautoma, WI 54982
Phone: (715) 410-4222
thomas.meronek@wisconsin.gov

dnr.wi.gov

From: Hays, Nicole M - DNR <nicole.hays@wisconsin.gov>
Sent: Tuesday, April 26, 2022 11:47 AM
To: Hudak, Andrew J - DNR <Andrew.Hudak@wisconsin.gov>; Woodbury, Bryan J - DNR <Bryan.Woodbury@wisconsin.gov>; Meronek, Thomas - DNR <Thomas.Meronek@wisconsin.gov>
Subject: Stream Enclosure - village of little chute

Hello all,

If you could get me your feedback as soon as possible I would appreciate it. The village does not what to change their plans for the full enclosure. They still have to provide their response to the additional information but that doesn't change what their overall plan was that was discussed during the onsite.

Thank You,

We are committed to service excellence.
Visit our survey at http://dnr.wi.gov/customersurvey to evaluate how I did.

Nicole Hays
Water Management Specialist
Waterway Team/Northern Region
Wisconsin Department of Natural Resources
107 Sutliff Ave. Rhinelander, WI 54487
Phone: (715) 628-0069
Nicole.Hays@Wisconsin.gov

dnr.wi.gov

Hays, Nicole M - DNR

From: Pichler, Ryan D - DNR
Sent: Monday, April 11, 2022 8:35 AM
To: Hays, Nicole M - DNR
Subject: RE: WP-IP-NE-2022-45-X01-18T08-00-47 - Your feedback has been requested on this application.

Good Morning Nicole,

After our conversation with Michelle and Mike last week here are our initial comments.

Consultant requirements:

- Provide calculated flows.
- Provide additional input/output information and tables from the hydrologic and hydraulic analysis. Sufficient data must be provided for the DNR to review all assumptions, model inputs, and model results without being able to run or analyze the project using the proprietary software.
- Table 3 shows a stream depth of 2.97 ft for the 2-yr and 7.9 ft for the 100-yr for POI ID 1 and 4.93 ft for a 2-yr storm and 8.81 ft for a 100-yr storm for POI ID 3. Confirm the modelling is accurate for the existing conditions.

Design Considerations for you to consider:

- Will there be a trash rack or animal guard installed at the upstream end of the existing culvert? That will now be an intake for the proposed storm sewer. Was a blockage percentage used in the calculations for the intake to account for any modifications to the entrance configuration?
- Provide exit velocity and shear stress calculations to show the channel downstream of proposed storm sewer will be stable.

Let me know if there is anything else you need from me prior to meeting on site on Wednesday.

Thanks,

We are committed to service excellence.
Visit our survey at http://dnr.wi.gov/customersurvey to evaluate how I did.

Ryan Pichler, P.E.
Mobile: (920)769-6234
Ryan.Pichler@wisconsin.gov

From: nicole.hays@wisconsin.gov <nicole.hays@wisconsin.gov>
Sent: Monday, April 4, 2022 9:54 AM
To: Pichler, Ryan D - DNR <ryan.pichler@wisconsin.gov>
Subject: WP-IP-NE-2022-45-X01-18T08-00-47 - Your feedback has been requested on this application.

You are being asked to review and provide comments on a pending DNR Water permit application - WP-IP-NE-2022-45-X01-18T08-00-47

Task assigned by: Hays, Nicole on 4/4/2022 - Please respond by 5/3/2022

To complete this task:

1) Review WP-IP-NE-2022-45-X01-18T08-00-47 (Click to open Permit Application Document Set in SharePoint)
2) Click Here to open the feedback request form.
3) Complete the feedback form.
4) Click '**Submit Feedback**' to send your feedback to the Reviewer who sent it to you.

The request has also included the following comments:

Pichler, Ryan

Hello resource managers,

Could you please help me review for possible impacts to the public interest ie. (wildlife habitat, fisheries habitat, water quality, natural scenic beauty, cumulative impacts) and to ensure the project will not violate public rights or endanger life, health or property.

Thank You

Hays, Nicole M - DNR

From: Woodbury, Bryan J - DNR
Sent: Wednesday, April 27, 2022 2:20 PM
To: Hays, Nicole M - DNR
Subject: RE: Stream Enclosure - village of little chute

Follow Up Flag: Follow up
Flag Status: Flagged

Nicole,

Going to an enclosed stream system is taking a step backwards in regards to available habitat, as far as game wildlife are concerned. The current stream system has limited free water and macro invertebrates for food resources. However, going to a closed system removes these limited resources. It would be preferred to develop alternate systems to remove the current gabion walls and establish a stream system with side slopes that provide safer access to water and invertebrates for game wildlife.

Thanks.
Bryan

We are committed to service excellence.
Visit our survey at http://dnr.wi.gov/customersurvey to evaluate how I did.

Bryan Woodbury
Phone: (920) 420-2564
bryan.woodbury@wisconsin.gov

From: Hays, Nicole M - DNR <nicole.hays@wisconsin.gov>
Sent: Tuesday, April 26, 2022 11:47 AM
To: Hudak, Andrew J - DNR <Andrew.Hudak@wisconsin.gov>; Woodbury, Bryan J - DNR <Bryan.Woodbury@wisconsin.gov>; Meronek, Thomas - DNR <Thomas.Meronek@wisconsin.gov>
Subject: Stream Enclosure - village of little chute

Hello all,

If you could get me your feedback as soon as possible I would appreciate it. The village does not what to change their plans for the full enclosure. They still have to provide their response to the additional information but that doesn't change what their overall plan was that was discussed during the onsite.

Thank You,

We are committed to service excellence.
Visit our survey at http://dnr.wi.gov/customersurvey to evaluate how I did.

Nicole Hays
Water Management Specialist
Waterway Team/Northern Region
Wisconsin Department of Natural Resources
107 Sutliff Ave. Rhinelander, WI 54487

Phone: (715) 628-0069
Nicole.Hays@Wisconsin.gov

dnr.wi.gov

Item For Consideration

For Board Review On: June 1, 2022
Agenda Item Topic: LC CAN Expansion

Prepared On: May 24, 2022
Prepared By: Finance

Report: In October 2021, the Village Board approved the selection of Livermore Technologies as a project manager to begin the first phase of design and engineering in an amount not to exceed $9,185 (Little Chute School Board approved the same action). It has since been discovered the original memo from LC CAN had an error transposing the dollar figure in addition to excluding a line item that should have been identified with the Design and Engineering phase (see memo attached).

A cost-sharing proposal is expected in the next few weeks from the consultant to consider future phases.

Fiscal Impact: The overall cost is unchanged only the classification between the two phases is corrected. To date the Village had obligated $9,185 of the $1,264,501 American Rescue Fund award for Design Phase 1 of the LC CAN expansion project. A budget adjustment is necessary to correct this increasing the per member cost by $2,530.

<u>American Rescue Special Revenue Fund</u>

Federal Grant (Revenue)	+ $2,530
Engineering and Design (Expense)	+ $2,530

Recommendation/Board Action: Please approve the 2022 Budget Adjustment to correct the Phase 1 cost increasing by $2,530.

Respectfully Submitted,

Lisa Remiker-DeWall, Finance Director

Little Chute Community Area Network Expansion Project

May 23, 2022

Cost Adjustment Approval Request

In October of 2021 the LC CAN Committee presented their selection for Project Manager of the LC CAN Expansion project and requested approval to begin the Design and Engineering phase of the Expansion Project. (Oct 5, 2021 Memo attached)

We have discovered that the memo presented to the boards included an error where the total cost for the Design and Engineering phase was flipped with the total cost of the Construction PM phase, leading the boards to approve an incorrect amount. Additionally, we have learned that the hourly tasks included in the Design and Engineering phase should have been 213 hours rather than 200 hours picking up all applicable line items.

Bid Total: $40,370.00
200 hrs for Design and Engineering - ~~$18,370.00~~, should be 213 hours at $110/hr = $23,430.00
167 hrs for RFP/PM/Permitting - ~~$22,000.00~~, should be 154 hours at $110/hr = $16,940.00

The bid cost is unchanged only the classification between Design and Construction PM phase corrected. We would like to amend the request to approve the number of hours for Design and Engineering to 213 hours at a cost of $23,430.00. This represents an increase to phase 1 of $5,060.00 (per member increase of $2,530.00).

Little Chute Community Area Network Expansion Project

October 5, 2021

Project Approval Request

In May of 2021, the LC CAN Committee presented their proposal for an Expansion Project. We have since solicited bids for a Project Manager to assist with the design and engineering as well as management of the construction portions of this project.

After a review of the bids the LC CAN Committee would like approval to move forward in selecting Livermore Technologies as our Project Manager. We also ask for your approval to begin the Design and Engineering phase of the Expansion Project. The cost of this phase will be shared equally between the Village of Little Chute and the Little Chute Area School district totalling approximately $9,185.00 for each entity. An overall cost of $18.370.00.

Expansion Summary

The recommended expansion will:

- Connect multiple water towers and wells.
- Allow for additional public safety and traffic control cameras.
- Expand the reach of the school district's wifi.
- Provide a redundant connection to the internet for all our members.

Connect Water Towers and Wells

Providing fiber optics connections for the village water infrastructure will allow for modernization of communication and control systems. We are looking to use these new connections to expand and modernize the existing SCADA system.

Public Safety and Traffic Control

The proposed location of the expanded fiber infrastructure would allow for the addition of security cameras at a number of different intersections.

Expansion of WiFi

To allow for the expanded reach of the school district's Wi-Fi and address digital access inequities some of our students are experiencing.

Redundancy

Redundancy in technological systems is considered standard practice for any industry. It provides for disaster preparedness and network resiliency. The financial impact of downtime can be staggering, but with more devices than ever residing on the network including the addition of surveillance cameras and building automation devices - avoiding downtime will have a direct correlation to public safety and security.

Project Management RFP Evaluation Criteria - September 2021

Criteria
Prepared simply and economically, providing a straightforward concise description of Respondent's abilities to satisfy the RFP requirements.
A submission that includes: (a) the name of the company and contact person (b) current address, telephone number, and email address (c) signature of an authorized representative of the respondent.
Ownership Information, which shall identify how the company is owned; the year the company was established; the former name(s) of the company, if applicable; and the state in which the company is incorporated, if applicable.
A detailed description of how the Respondent proposes to implement the plan, disclosing all costs fully and plainly.
Overall cost
A minimum of 3 references that LC CAN can contact for information about Respondent's performance within the past 24months.

Livermore Technologies LLC

Received - 9/21/2021 6:08am
Total Points awarded - 100
Bid Total: $40,370.00

200 hrs for Design and Engineering - $18,370.00
167 hrs for RFP/PM/Permitting - $22,000.00

MCE

Received - 9/22/2021 1:51pm
Total Points awarded - 94
Bid Total: $57,065.01

Design and Engineering - $38,571.86
Project Management - $18,493.15

Little Chute

ESTABLISHED 1848

2023-2027
Capital Improvement Plan

2023-2027 Capital Improvement Plan

- Prioritization and timing incorporates strategic initiatives including Comprehensive Plan and Comprehensive Outdoor Recreation Plan
- Presented in advance of annual budget process for optimal guidance
- Reminder plan does not commit Village Board but is a process to consider significant capital needs, assess fiscal capacity, plan for debt issuance, and understand impact on reserves and operating budget

2023-2027 Capital Improvement Plan

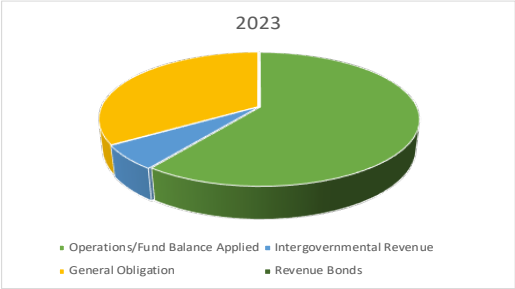

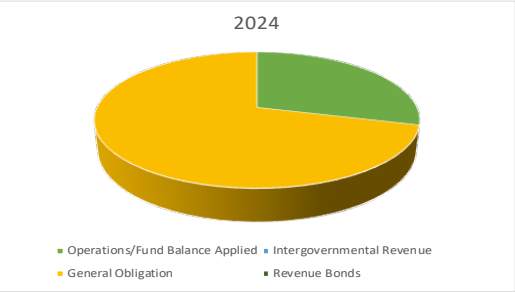

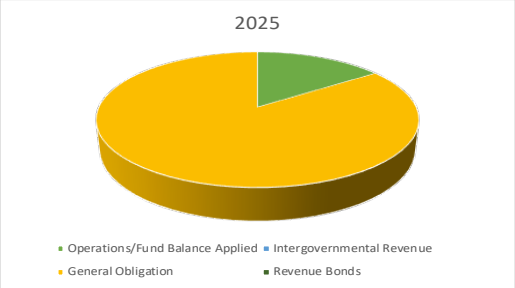

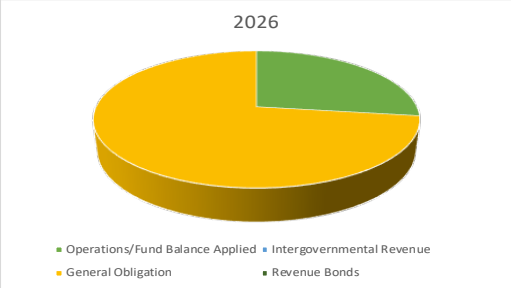

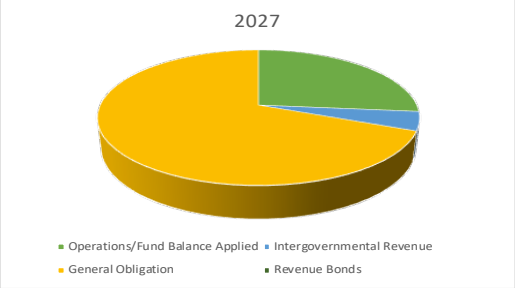

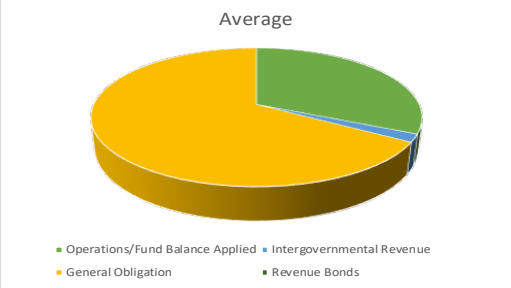

2023-2027 Capital Improvement Plan

Utility Rate Monitoring: Sewer Rate Study in process, Water will be pushed back from 2022 Budget (2021 rate of return 5.31%), Stormwater expect to budget rate analysis in 2023 or 2024

Construction Capital Project Fund spend down as planned – no debt issue until 2026

Fire Station proactively planned to maintain compliance with established Debt Policy

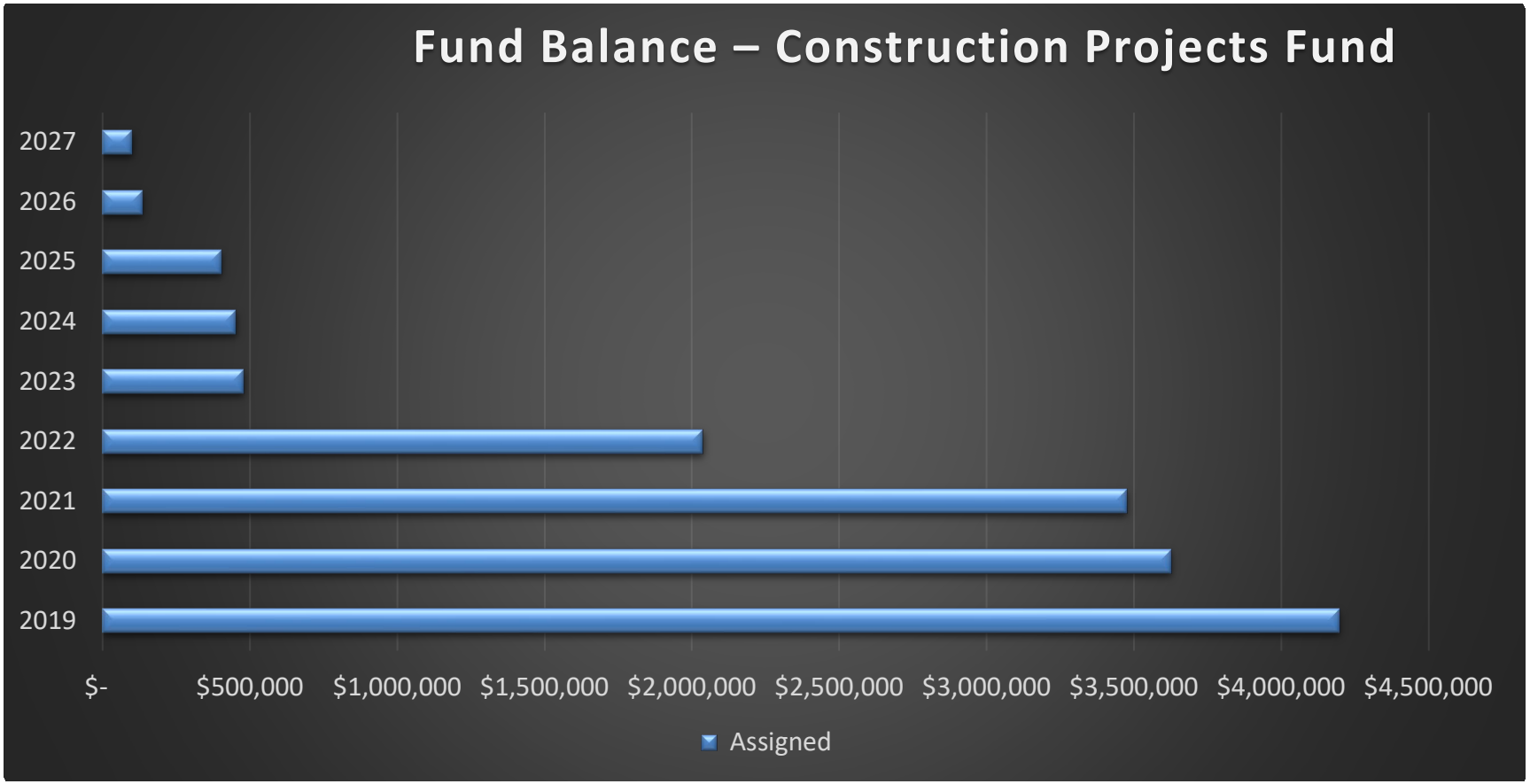
Fund Balance – Construction Projects Fund
2027
2026
2025
2024
2023
2022
2021
2020
2019
$-
$500,000
$1,000,000
$1,500,000
$2,000,000
$2,500,000
$3,000,000
$3,500,000
$4,000,000
$4,500,000
Assigned

2023-2027 Capital Improvement Plan

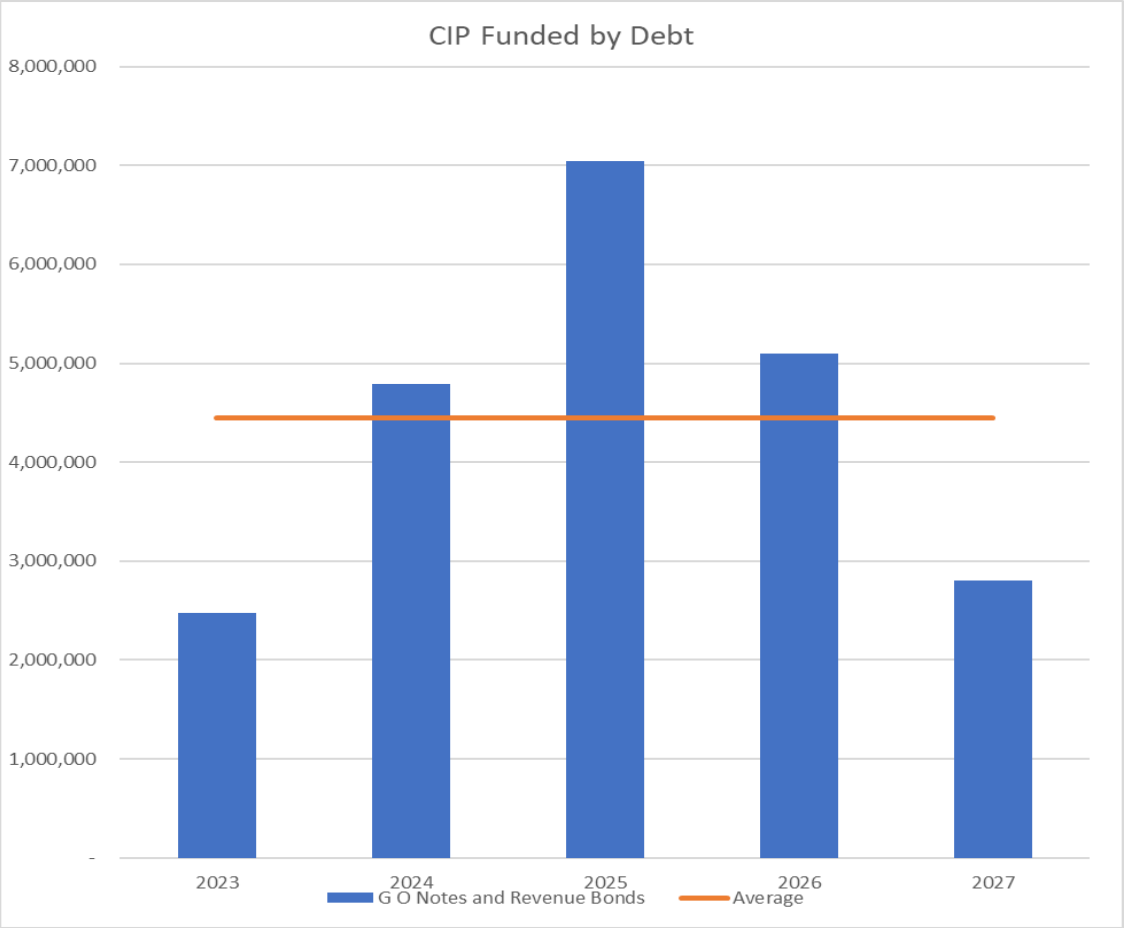
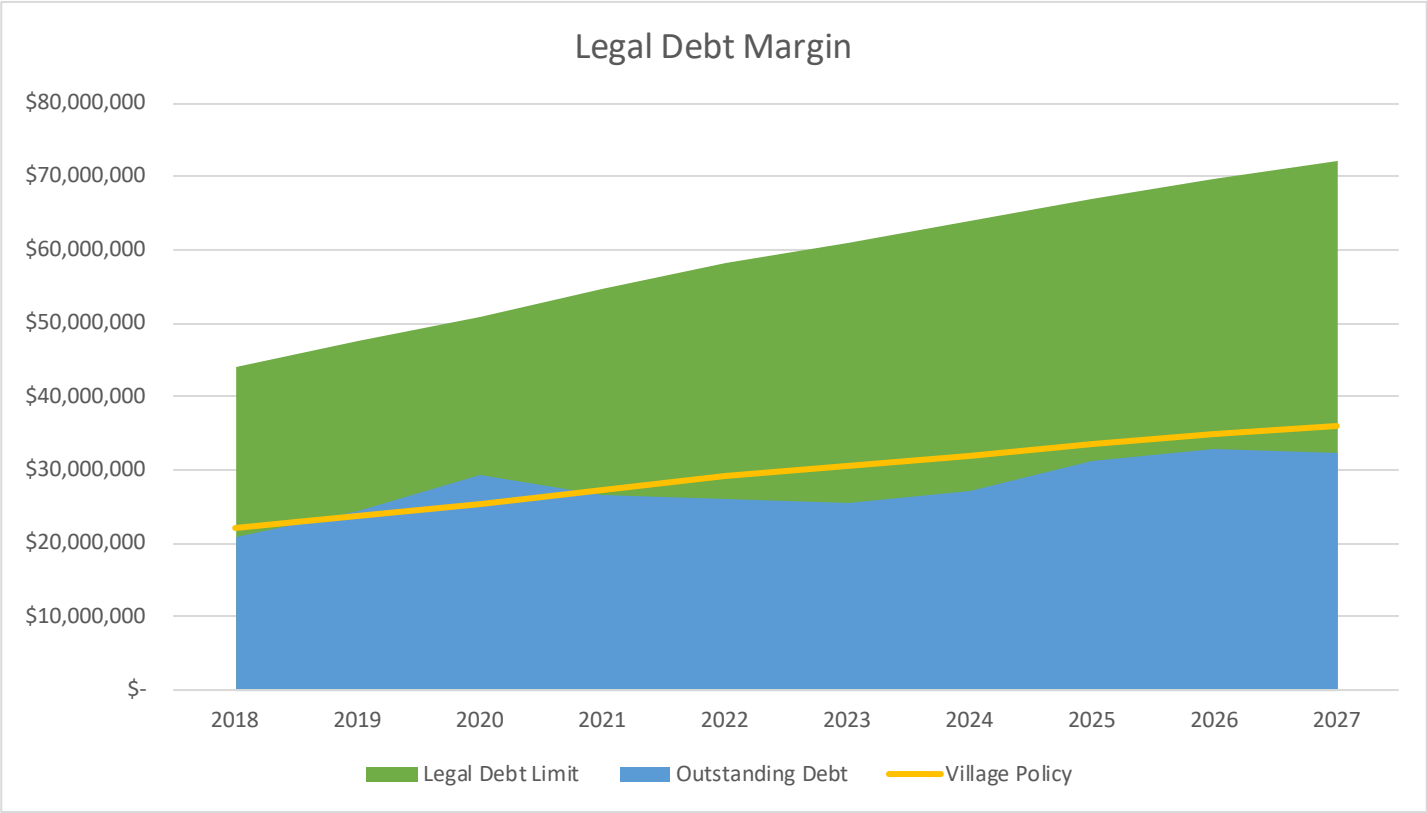
2023-2027 Capital Improvement Plan